XR-747R

SERVICE MANUAL

US Model

SPECIFICATIONS

Tape Transport Mechanism Type	MG-70-83

AUDIO POWER SPECIFICATIONS

POWER OUTPUT AND TOTAL HARMONIC DISTORTION

11 watts per channel minimum continuous average power into 4 ohms, 2 channels driven from 30 – 20,000 Hz with no more than 1% total harmonic distortion per Car Stereo Ad Hoc Committee standards.

OTHER SPECIFICATIONS

Power amplifier section

Outputs — Speaker outputs (sure seal connectors)
Preamp outputs (phono jacks)

Speaker impedance
4–8 ohms

Maximum power output
20 watts per channel at 4 ohms* (2-speaker connection)
6 watts per channel at 4 ohms* (4-speaker connection)
*Measured at 14.4V

Cassette player section

Tape — Prerecorded tape cassette
Head — Playback head
Tape track — 4-track 2-channel stereo
Frequency response
30—18,000 Hz (±3 dB)
Signal-to-noise ratio
With type II, IV cassette
58 dB (A-weighted)
With type I cassette
55 dB (A-weighted)
Wow and flutter
0.13% (WRMS)
Fast winding time
Approx. 100 sec.
(with Sony C-60 cassette)
Crosstalk — Between channels: better than 30 dB

FM/AM CASSETTE CAR STEREO

SONY®

MICROFILM

AUD

Tuner section

System: FM/AM superheterodyne tuner
Computerized quartz-locked synthesizer system

FM tuner section

Tuning range: 87.9–107.9 MHz
Antenna terminal: FM/AM external antenna connector
FM/AM power antenna relay control lead
Intermediate frequency: 10.7 MHz
Usable sensitivity: 15 dBf (75 ohms)
Sensitivity at 50 dB quieting: 20 dBf (75 ohms)
Selectivity: 65 dB at 400 kHz
Signal-to-noise ratio: 65 dB (stereo), 68 dB (mono)
Harmonic distortion at 1 kHz: 0.5% (stereo), 0.5% (mono)
Separation: 30 dB at 1 kHz
Frequency response: 30–15,000 Hz
Capture ratio: 2.0 dB

AM tuner section

Tuning range: 530–1,620 kHz
Antenna terminal: FM/AM external antenna connector
FM/AM power antenna relay control lead
Intermediate frequency: 450 kHz
Sensitivity: 35 μV

General

Time display system: 12-hour display
Tone controls: Bass ±8 dB at 100 Hz
Treble ±8 dB at 10 kHz
Loudness (at −30 dB): +6 dB at 100 Hz
+5 dB at 10 kHz
Output lead: Power antenna relay control lead
Power requirements: 12 V dc car battery (negative ground)
Dimensions: Approx. 178 × 50 × 150 mm (w/h/d) (7 × 2.× 6 inches) not incl. projecting parts and controls
Mounting dimensions: Approx. 178 × 50 × 135 mm (w/h/d) (7 × 2 × 5³/₈ inches) not incl. projecting parts and controls
Weight: Approx. 1.4 kg (3 lb 2 oz)

FLEXIBLE CIRCUIT BOARD REPAIRING

1. Keep the temperature of the soldering iron at 270° ± 10°C during repairing.
   You can maintain the temperature of the soldering iron around 270°C by using the thermal controller as illustrated on the right.
2. Do not touch the soldering iron more than 4 seconds or 3 times on the same conductor of the circuit board.
3. Do not apply force on the conductor when soldering or unsoldering.

Tip of soldering iron

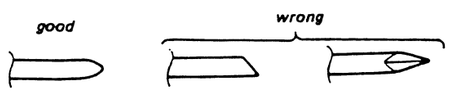

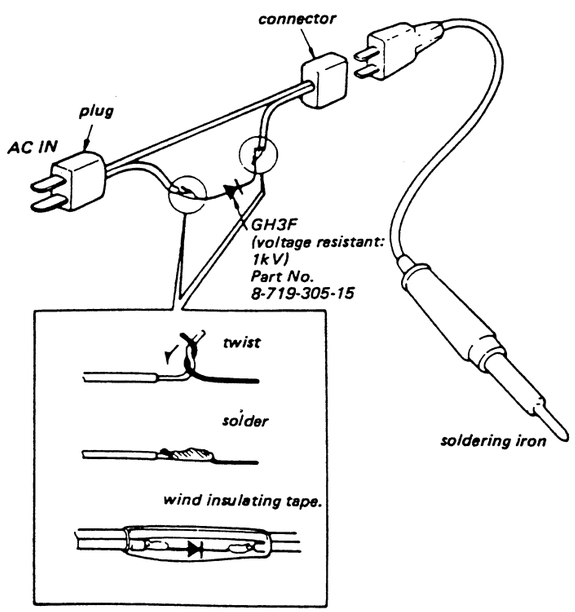

REPLACING CHIP COMPONENTS

All chip components should be connected and disconnected, using a tapered soldering iron [temperature of the iron tip: less than 280°C (536°F)], a pair of tweezers and braided wire.

Precautions for replacement

1. Do not disconnect the chip component forcefully. Otherwise, the pattern may peel off.
2. Never re-use a disconnected chip component. Dispose of all old chip components.
3. To protect the chip component, heating time for attaching the component should be within 3 seconds.

○ Removing chip components

(1) Removing solder at electrode
Remove the solder at the electrode, using a thin braided wire. Do not remove the solder of the part (chip component) attached adjacent to the electrode.

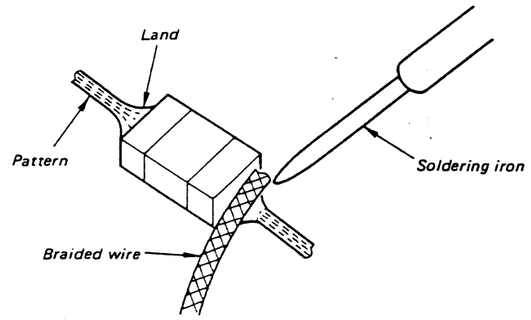

(2) Disconnecting chip components
Turn the tweezers with the soldering iron alternately applied to both electrodes, and the chip component will be disconnected. Take careful precautions while disconnecting, because if the chip component is forcefully removed the land may peel off.
Never re-use a disconnected chip component.

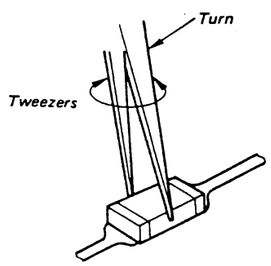

(3) Smoothing the soldered surface
After disconnecting the chip component, remove the solder by using a braided wire to smooth the land surface.

○ Connecting chip components

The value of chip components is not displayed on the main body. Take due precautions to avoid mixing new chip components with other ones.

(1) Applying solder to land on one side
Apply a thin layer of solder to the land on one side where the chip component is to be connected. Too much solder may cause bridging.

(2) Speedy soldering
Hold the chip component at the desired position, using tweezers, and apply the soldering iron in the arrow-marked direction. To protect the chip component, heating time should be within 3 seconds.

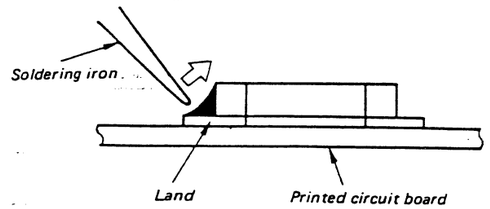

(3) Speedy soldering of electrode on the other side
Solder the electrode on the other side in the same way as in (2) above.

LOCATION AND FUNCTION OF CONTROLS

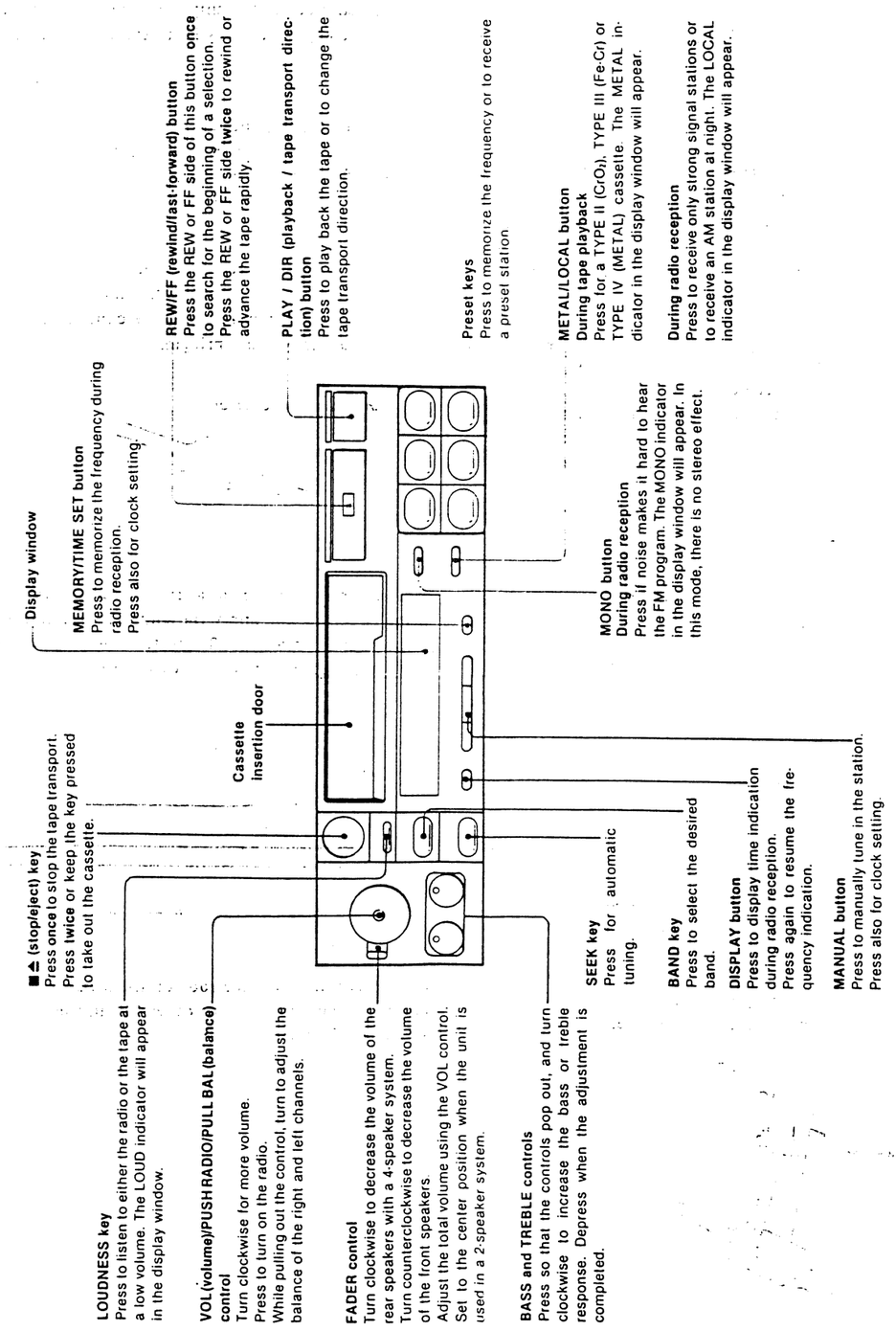

HOW TO SET THE CLOCK

When the connection is finished, the time indication is displayed in the display window. Set the time indication to the present time as follows.

To set the hour
While pressing the MEMORY button, press the H side of the MANUAL button.
Every time the H side is pressed, the number increases by one, up to 12, then goes back to 1. When you keep the H side pressed, the number increases up to 12 and returns to 1 repeatedly.

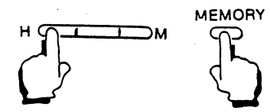

To set the minute
While pressing the MEMORY button, press the M side of the MANUAL button.
Every time the M side is pressed, the number increases by one, up to 59, then goes back to 00. When you keep the M side pressed, the number increases up to 59 and returns to 00 repeatedly.

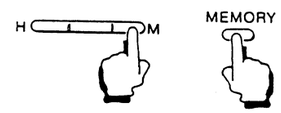

Zero second adjustment
If you want to adjust the time exactly to the second with a radio or telephone time signal, proceed as in the following example.

Example: To set to 9:00 to the second
1 Adjust the time indication to 9:59 as described before.
2 As soon as you hear the time signal on the telephone, radio or TV, while pressing the MEMORY button, press the M side of the MANUAL button.

FUSE REPLACEMENT

The fuse will blow if excessive current is drawn. If the fuse blows, check the power connection and replace the fuse following the illustration below. If the fuse blows again after replacement, there may be an internal malfunction. You should then consult your nearest Sony dealer.

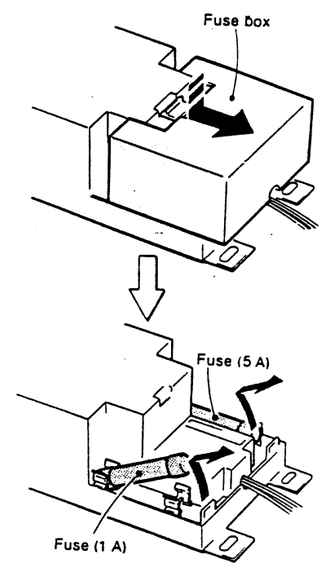

Warning
Use only an 5 ampere fuse and a 1 ampere fuse. Use of a higher amperage fuse may cause serious damage.

SECTION 1
OUTLINE

1-1. CIRCUIT DESCRIPTION

[IC201 (μPD1708G-547)]

μPD1708G-547 is a 4 bit C-MOS microprocessor for digital tuning, and contains a prescaler which operates up to 150MHz, a PLL and LCD driver on one chip.

1. Outline of Functions

(1) Reception frequencies, Channel space, Reference frequencies, Intermediate frequencies

Destination	Band	Frequency range	Channel space	Reference frequency	Intermediate frequency
U.S.A.	FM	87.9 – 107.9 MHz	200 kHz	25 kHz	10.650, 10.700, 10.750 MHz
	AM	530 – 1,620 kHz	10 kHz	10 kHz	450 kHz
Japan	FM	76.0 – 90.0 MHz	100 kHz	25 kHz	10.650, 10.700, 10.750 MHz
	AM	522 – 1,629 kHz	9 kHz	9 kHz	450 kHz
Other	FM	87.5 – 107.9 MHz	100 kHz	25 kHz	10.650, 10.700, 10.750 MHz
	AM	531 – 1,611 kHz	9 kHz	9 kHz	450 kHz

(2) Radio Functions

1) Auto tuning
- Scan up: Receives for 5 seconds on each scanned frequency.
- Seek up: Stays at the frequency first received.

2) Manual tuning
- Manual up/down: Tuning by step and fast tuning with push switch.

3) Preset memory call
- U.S.A.: Capable of preset for 6 stations each in FM1, FM2 and AM.
- Japan: Capable of preset for 6 stations each in FM and AM.

4) LOCAL/DX control output.
5) MONO/STEREO control output.
6) Stereo display.

(3) Tape Functions

1) Direction display
2) METAL control output
3) DOLBY control output
4) AMS control output

(4) Clock Function

12 hour display, colon flashes in one second cycles.

(5) Other Functions

1) LOUDNESS control output
2) Key acknowledge output

2. Pin Functions

Pin No.	Symbol	IN/OUT	Function
1–4 34–52	LCD1–LCD23	OUT	LCD segment signal output pin.
5, 6	COM1, COM2	OUT	LCD common signal output pin.
7, 33	V_{DD}		Power supply pin. Pins (7) and (33) are connected inside the IC.
8	FM	IN	FM local oscillation input pin.
9	AM	IN	MW, LW local oscillation input pin.
10	GND		Ground.
11, 12	EO1, EO2	OUT	PLL error output pin. Outputs "H" when the divided local oscillation frequency is higher than reference frequency, and low when it is lower.
13	CE	IN	Device selection signal input pin. "H" when ACC is ON.
14	NC		Not used
15, 16	XI, XO		Crystal oscillator connection pin. (4.5MHz)
17	MUTE	OUT	Muting signal output pin. Outputs "H" during TAPE/RADIO switching, when frequency changes and during band switching.
18	KEY ACK	OUT	Key acknowledge output. When a valid key functions, outputs "H" for about 44msec to turn the buzzer on.
19 20	KS5-K5 KS4-K4	OUT or IN	During reset during power supply input (VDD ON) or from back-up state (CE, "L" → "H"), output key return signal source for diode matrix take-in. Subsequently function as key matrix key return signal input pins.
21–24	K3–K0	IN	Key matrix key return signal input pins.
25	BAND-AMS	OUT	During RADIO: Band switching signal output pin. Outputs "H" for FM, "L" for MW, LW During TAPE: AMS signal output pin. Outputs "H" for AMS.
26	LOCAL/$\overline{\text{DX}}$-METAL	OUT	During RADIO: LOCAL/DX signal output pin. Outputs "H" for LOCAL, "L" for DX. During TAPE: METAL signal output pin. Outputs "H" for METAL.
27	MONO/$\overline{\text{STEREO}}$-DOLBY	OUT	During RADIO: MONO/STEREO signal output pin. Outputs "H" for MONO, "L" for STEREO. Only valid during FM, constantly "L" for MW, LW. During TAPE: DOLBY signal output pin. Outputs "H" for DOLBY.
28	LOUDNESS (LW)	OUT	• WITHOUT LW LOUDNESS signal output pin. Outputs "H" for LOUDNESS. • WITH LW LW BAND signal output pin. Output "H" for LW, "L" for MW and FM.
29	KS3	OUT	Transistor matrix key return signal source output.
30–32	KS2–KS0	OUT	Switch matrix key return signal source output.

3. Key Matrix

(1) Key Matrix Structure

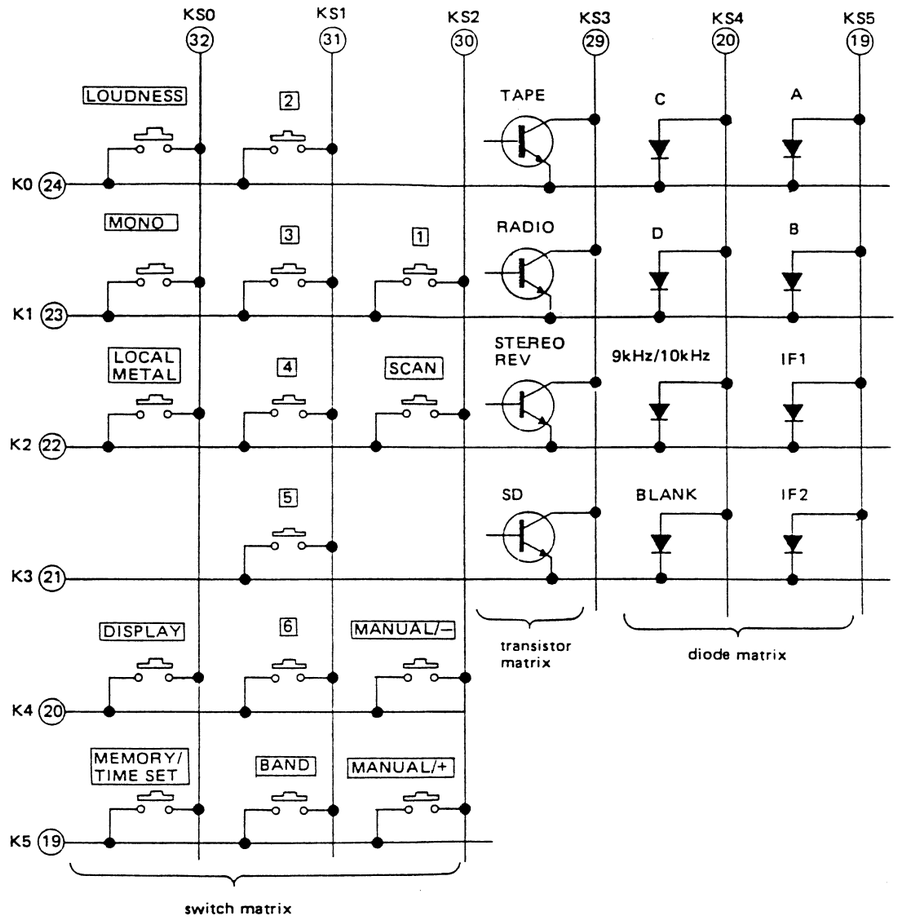

(2) Diode Matrix for Initial Setting

There are 5 types of diode matrixes for initial setting, as shown below. These are all read in only when power supply is input (POWER ON RESET) and the CE pin goes from low to high (CE RESET), and after that the diode matrix state is ignored.

- Switches for destination setting: A, B
- Switches for AM band channel plan setting: 9kHz/10kHz
- Switch for selection when CE "L" is displayed: BLANK
- Switches for selecting DOLBY and AMS key valid or invalid: C, D
- Switches for setting FM band intermediate frequency: IF1, IF2

These settings are done by shorting or opening the nodes on the matrix with a diode. (On the following table, "1" indicates shorting by diode, and "0" indicates open.)

Diode Matrix for Initial Setting

Symbol	Description
A	These are switches for destination setting. Setting is as shown below. A: Destination 0: area 1 1: area 2
LW	These are switches for setting WITH LW or WITHOUT LW. LW: band: LOUDNESS function 0: FM and MW: provided 1: FM, MW and LW: not provided
DISCLOCK	These are switches for setting WITH CLOCK or WITHOUT CLOCK. DISCLOCK: CLOCK function 0: CLOCK function 1: no CLOCK function When set in WITHOUT CLOCK function mode, CE is LOW level to stop the CLOCK function and IC201 changes to in back up mode, so power consumption is low.
BLANK	Switch to select display when (13) CE pin goes low. 0: Clock display. 1: Blank (No display)
C D	Switches for selecting DOLBY and AMS key valid or invalid. C: D: DOLBY: AMS 0: 0: x: x 1: 0: x: o 0: 1: o: o 1: 1: o: x In the table, "o" is valid, "x" is invalid.

Symbol	Description
IF1 IF2	These switches are for FM band intermediate frequency setting.

IF1	IF2	Intermediate frequency
0	0	10.7MHz
1	0	10.65MHz
0	1	10.75MHz
1	1	–

(3) Transistor Switch for Mode Switching

Unlike the initial setting switches, these switches are always capable of switching. (In the table, "1" means switch ON, "0" means switch OFF.)

Mode Switching Transistor Switches

Symbol	Description
TAPE RADIO	Sets RADIO mode or TAPE mode. When TAPE switch is 1, the mode is TAPE regardless of the RADIO switch state. When RADIO switch is 1, the mode is RADIO if the TAPE switch is 0. When both are 0, the mode is clock display.
STEREO REV	During RADIO mode: Stereo signal input switch. When this switch is 1, "ST" is displayed on the LCD panel. However, "ST" display goes out even if this switch is 1 during clock display and during auto tuning. During TAPE mode: Tape running direction display signal input switch. When this switch is 1, "▶" is displayed on the LCD panel when "◀" is 0.
SD	Station detector input during auto tuning. This switch goes 1 within about 50ms after PLL locks. After 1 is detected once, then again 250-375ms later, SD existing is judged.

[IC701 (TC9310N-065)]

TC9310N-065 is a programmable ROM array LSI for sequence control, and performs mechanism control, muting control and LED control.

1. Pin Functions

Pin No.	Symbol	IN/OUT	Function
1	GND		Ground.
2	OSC		Time constant connection pin for internal clock generator.
3	CL	IN	System clear pin. Reset is done by making this pin go from low to high. For "L", the following state exists: – OSC circuit oscillation stops. – Muting output is high. – All other outputs are low. Also, same state as when this pin is low exists when pin (28) VDD becomes less than 3.8V due to the internal auto clear circuit.
4	ACC IN	IN	ACC power supply input pin. By inputting ACC power supply, EJECT is performed when the tape is inserted during KEY OFF EJECT and ACC OFF.
5	TAPE IN	IN	Tape detection input pin. Inputs high when a tape is inserted and detects completion of tape insertion and eject.
6	OUT SW	IN	EJECT detection input pin. Inputs high during EJECT operation and low when it is completed. This pin detects EJECT completion by pin 5 TAPE IN going low.
7	$\overline{\text{FWD}}$/REV	IN	FWD/REV identification input pin. Inputs "L" for FWD, "H" for REV.
8	$\overline{\text{AMS MODE}}$	IN	AMS mode selection pin. Inputs "L" for AMS mode. FF, REW switch ON → FF AMS, REW AMS FF, REW switch ON again → FF, REW During "OPEN" or "H" input: FF, REW switch double pressing is invalid (except pin 15 AMS IN input and pin (18) AMS MUTE, pin (23) AMS IND outputs are valid) and for FF, REW switch ON → FF, REW.
9	$\overline{\text{FF SW}}$	IN	FF switch input pin. "L" during FF switch ON.
10	$\overline{\text{REW SW}}$	IN	REW switch input pin. "L" during REW switch ON.
11	$\overline{\text{STAND BY}}$	IN	Stand-by mode selection pin. "L" input: Stop mode for EJECT switch input within 0.3 seconds. EJECT operation after 0.3 seconds or for double pressing. "H" input: Stop mode. "OPEN": EJECT switch double pressing is invalid, and EJECT switch ON results in EJECT operation.
12	$\overline{\text{EJECT SW}}$	IN	EJECT switch input pin. "L" during EJECT switch on. This input receives continuously and has high priority, so functions with priority over other inputs.
13	$\overline{\text{END}}$	IN	Tape END detection input pin. Inputs 8 pulses "⎍⎍⎍⎍⎍⎍⎍⎍" for 1 reel rotation during PLAY. Judges tape END when "L" for more 0.6 seconds.
14	$\overline{\text{DIR SW}}$	IN	PLAY/DIR switch input pin. Inputs " ⎍ " when PLAY/DIR switch is ON. Inputs via one-shot circuit as it is continuously received input.
15	AMS IN	IN	AMS release signal input pin. Inputs " ⎍ " during AMS detection.
16	STAND BY IND	OUT	Not used.
17	TAPE	OUT	Amp control output, tape system power supply control output pin. "H" during TAPE.
18	AMS MUTE	OUT	AMS muting output pin. Output " ⎍ " during PLAY → FF AMS, PLAY → REW AMS, FF AMS → REW AMS, REW AMS → FF AMS switching.
19	MUTE	OUT	Audio muting output pin. "H" during direction switching, FF, REW and AMS.
20	KEY ACK	OUT	Key acknowledge output pin. " ⎍ " when valid key is input, during tape insertion, and during EJECT.
21	REW IND	OUT	REW LED display output pin. "H" during REW, REW AMS.
22	FF IND	OUT	FF LED display pin. "H" during FF, FF AMS.
23	AMS IND	OUT	AMS LED display output pin. "H" during FF AMS, REW AMS.
24	PLG 3	OUT	DIR solenoid control output pin. DIR solenoid ON at "H".
25	PLG 2	OUT	REW solenoid control output pin. REW solenoid ON at "H".
26	PLG 1	OUT	FF solenoid control output pin. FF solenoid ON at "H".
27	MOTOR	OUT	Motor control output pin. Motor ON at "H".
28	VDD		Power supply pin.

2. Modes and Operation

(1) Reset Operation

Reset operation takes place when pin (3) CL goes from low to high, and during power supply input, when pin (28) VDD goes below 3.8V. When there is a tape inserted during reset, (when pin (5) TAPE IN or pin 6 OUT SW is ON), the operation changes to eject and the tape is ejected. When there is no tape, the mode is OFF.

(2) OFF Mode

OFF mode is all outputs OFF when no tape is loaded (pin (5) TAPE IN and pin (6) OUT SW are OFF). All key inputs are invalid in this mode. When a tape is inserted in this mode (pin (5) TAPE IN goes ON), rewind is done for about 0.6 seconds to take up tape slack and play begins. When a tape is inserted when pin (4) ACC IN is OFF, the tape slack is taken up, then operation changes to EJECT.

(3) EJECT Operation

For EJECT operation, the output of pins (24) PLG3 (26) PLG1 goes OFF, and output of pin (19) MUTE and pin (27) MOTOR goes ON. The maximum time for EJECT operation is 5.7 seconds, and when EJECT is not completed (pin (5) TAPE IN, pin (6) OUT SW both OFF) within this time, ER STOP mode begins. After EJECT operation, OFF mode results.

(4) ER STOP Mode

ER STOP mode is a mode for when EJECT can not be done due to catching in the mechanism, etc., and prevents battery wear by turning all outputs off. During ER STOP mode, it is possible to use the EJECT key to try to EJECT again. When completion of EJECT (pin (5) TAPE IN, pin (6) OUT SW both OFF) is confirmed during ER STOP mode, the mode changes to OFF.

(5) PAUSE Operation

PAUSE operation occurs when pin (4) ACC IN goes off during PLAY, FF, REW, FF AMS, REW AMS. During PAUSE operation, pin (24) PLG3 and pin (19) MUTE outputs are ON, and other outputs are OFF. The maximum time for PAUSE operation is 5 seconds, and pin (4) ACC IN goes ON within 5 seconds after going OFF and PLAY begins. If it stays OFF for more than 5 seconds, EJECT operation takes place. Also, EJECT operation takes place immediately if the EJECT switch is pressed continuously for more than 1 seconds.

(6) STOP (STAND-BY) Mode

Stop mode takes place when pin (11) STAND BY input is low and EJECT switch is ON, or when it is "H". During stop mode, pin (24) PLG3 and pin (16) STAND BY IND outputs are ON and all other outputs are OFF. When there is pin (14) DIR SW input during stop mode, PLAY mode begins, and when there is pin (12) EJECT SW input, EJECT operation begins. When pin (4) ACC IN goes off during stop mode, PAUSE operation begins, and when pin (4) ACC IN goes on within 5 seconds, stop mode results, and when off for more than 5 continuous seconds, EJECT operation takes place.

1-2. BLOCK DIAGRAM

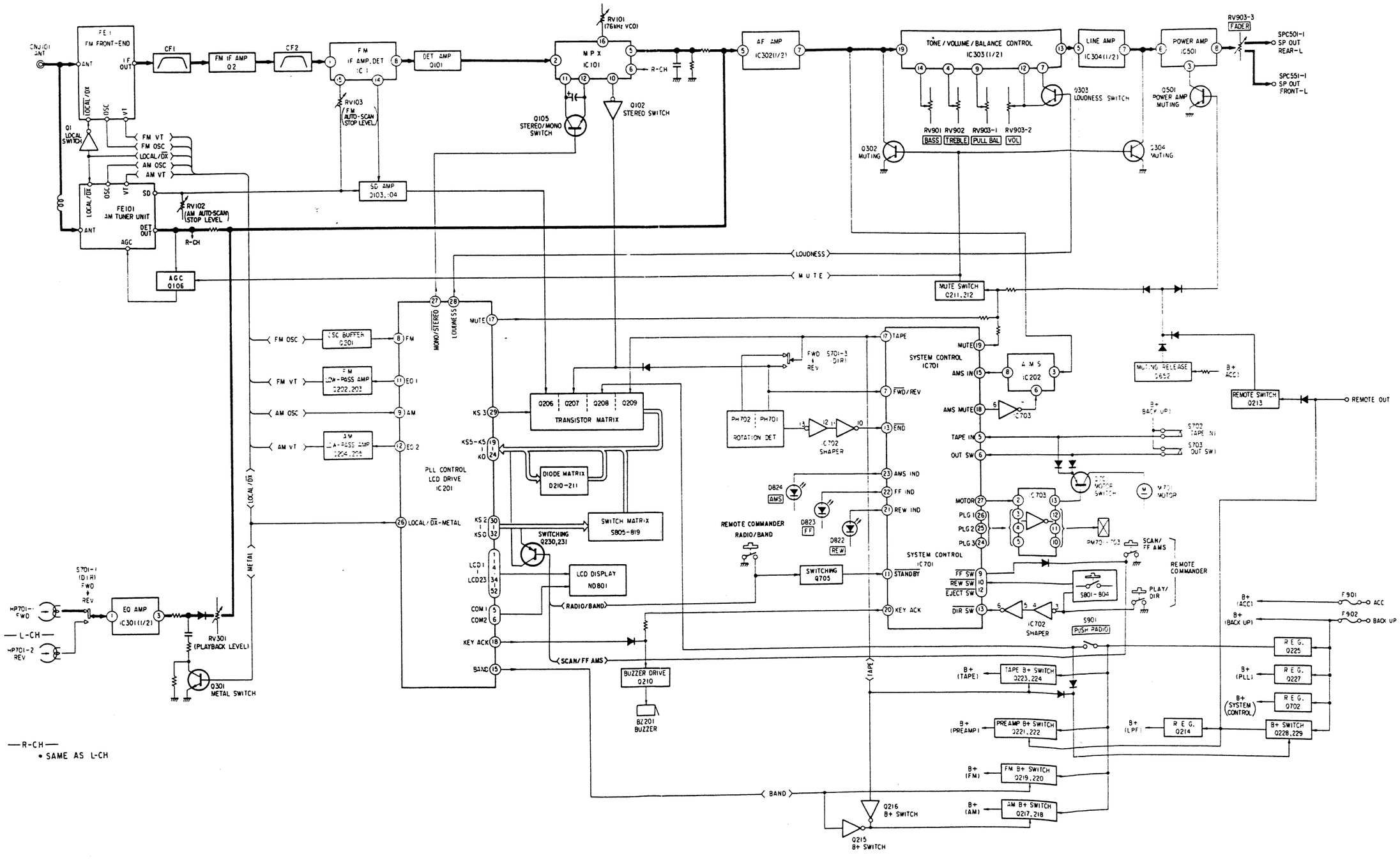

SECTION 2
DISASSEMBLY

- Follow the disassembly procedure in the numerical order given.

CASE (UPPER)
Remove case by taking out four screws.

NOSE PIECE

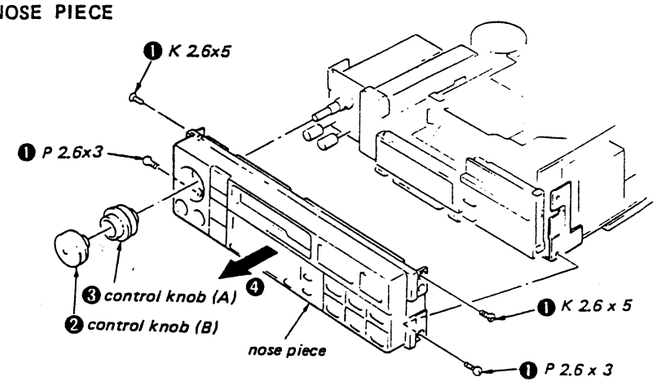

DISPLAY BOARD
FRONT BRACKET

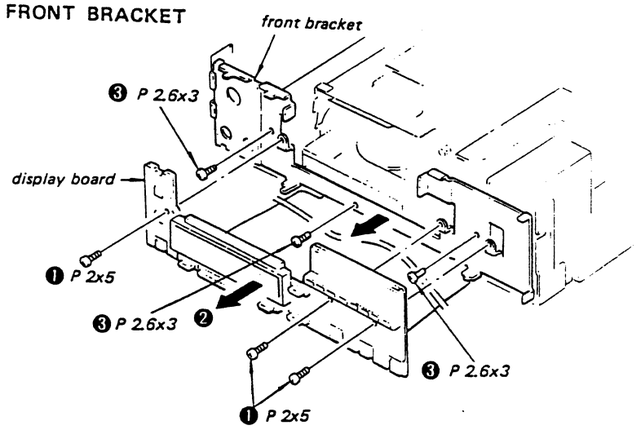

AUDIO (A) BOARD
AUDIO (B) BOARD

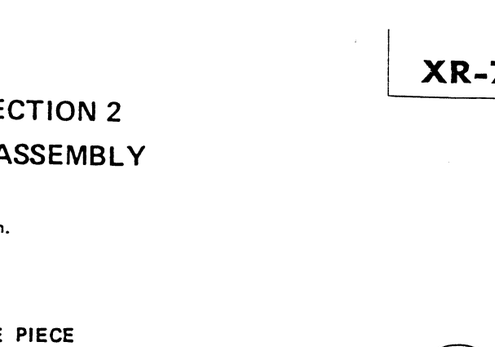

VOL (A) BOARD
VOL (B) BOARD

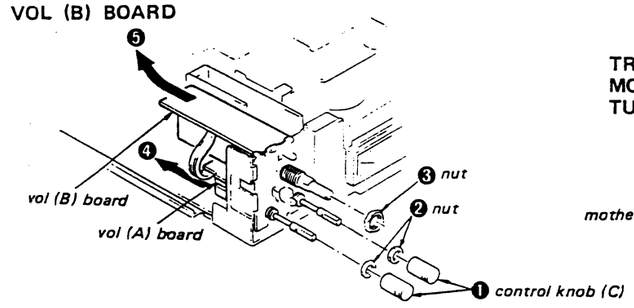

TRANSPORT MECHANISM
MOTHER BOARD
TUNER BOARD

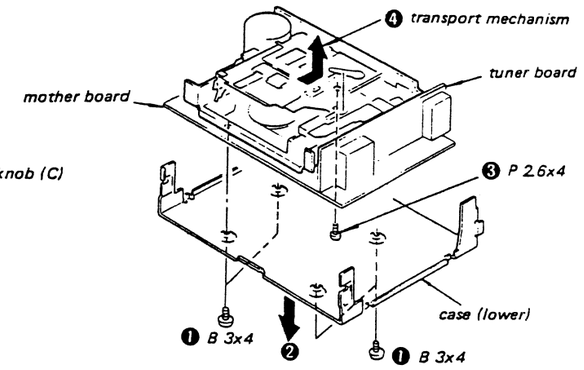

POWER SUPPLY BLOCK

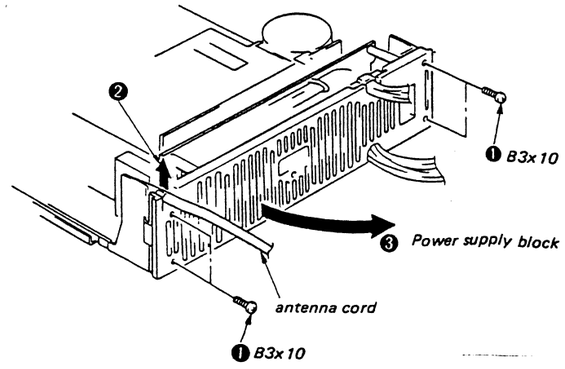

POWER AMPLIFIER BOARD
CONNECTOR BOARD

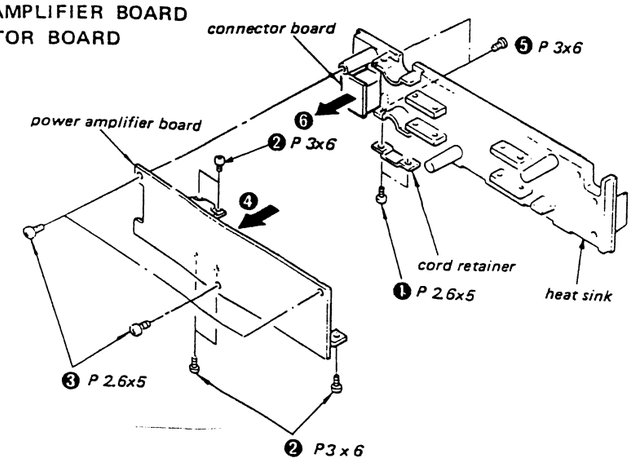

MD SYSTEM CONTROL BOARD

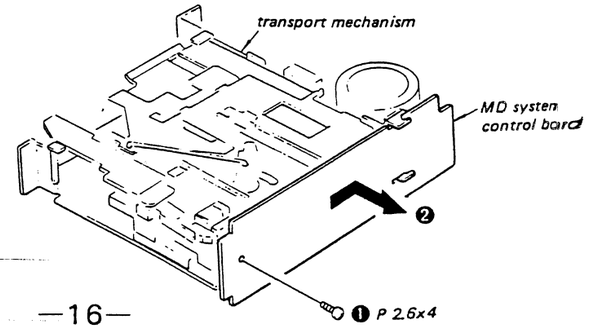

SECTION 3
ADJUSTMENTS

SUB CHASSIS BLOCK

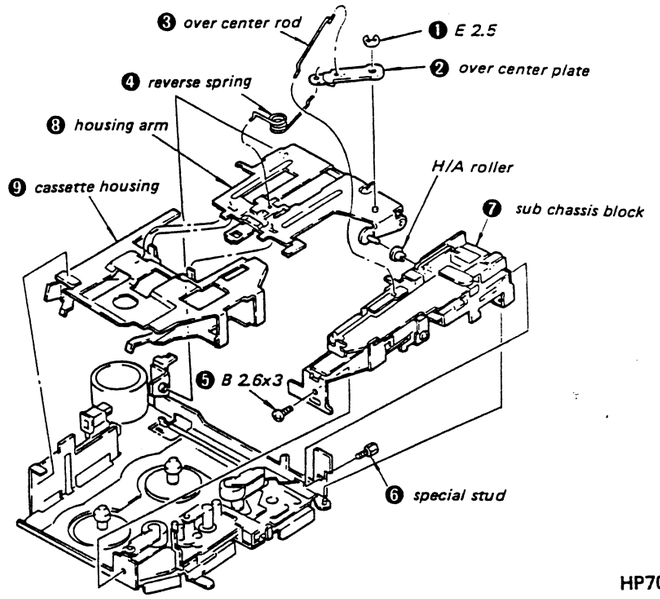

HP701, P·R ARM

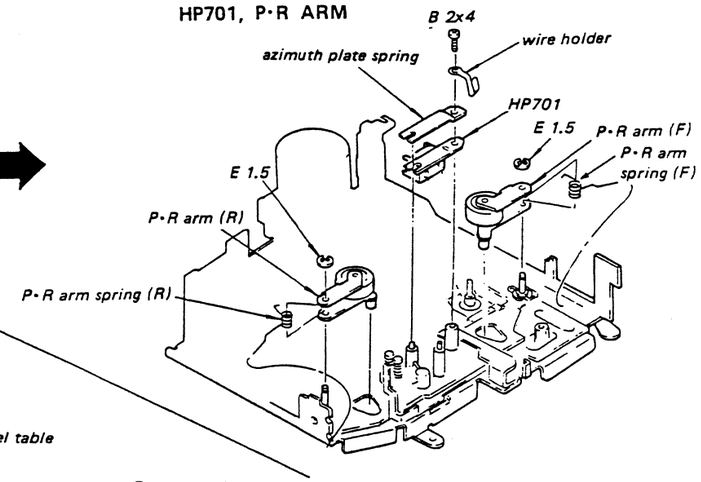

REEL TABLE, FLYWHEEL

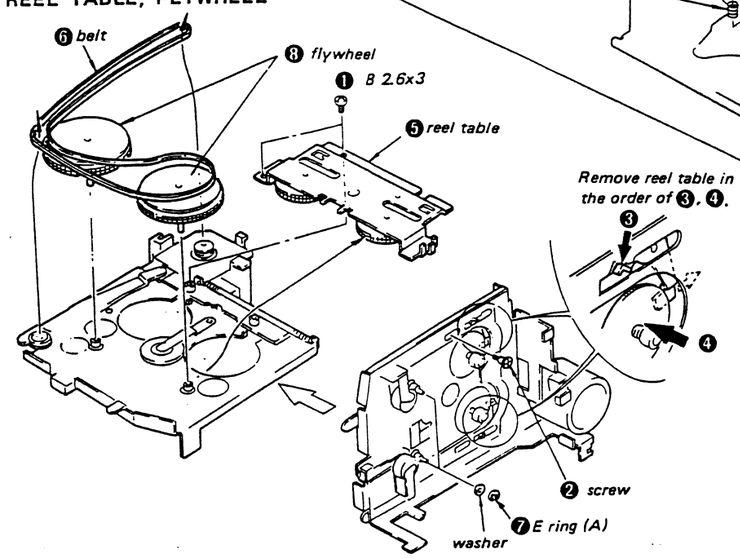

3-1. MECHANICAL ADJUSTMENTS

No mechanical adjustments applied to this unit.

- Torque Measurement

Mode	Torque Meter	Torque
FWD	CQ-102B	25 – 60 g·cm (0.35 – 0.84 oz·inch)
FF	CQ-201A	50 – 130 g·cm (0.7 – 1.82 oz·inch)
REW	CQ-201A	50 – 130 g·cm (0.7 – 1.82 oz·inch)
FWD back tension	CQ-102B	1 – 5 g·cm (0.014 – 0.07 oz·inch)

3-2. ELECTRICAL ADJUSTMENTS

Note: The adjustment should be performed in the order given in this service manual.
The adjustments should be performed for both L-CH and R-CH.

- Power-supply voltage is +14.4V DC as per Ad Hoc recommendation.
- Switches and controls should be set as follows unless otherwise specified.

PUSH RADIO switch: RADIO
PULL BAL control: center click
FADER control: center click
BASS control: center click
TREBLE control: center click
LOUDNESS: OFF
METAL/LOCAL: OFF

Adjustment Location:

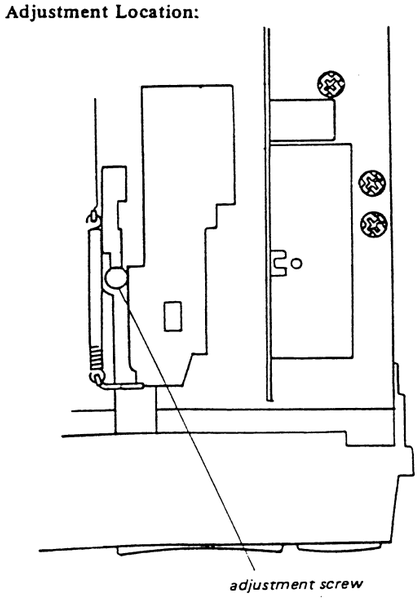

TAPE SECTION

Playback Head Azimuth Adjustment

Procedure:

1. Mode: forward playback

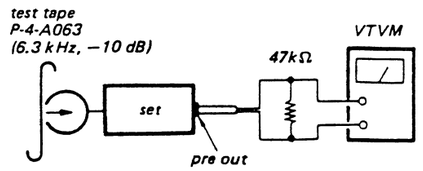

Adjust for forward (▶) direction and reverse (◀) direction.

2. Turn the adjustment screw for the maximum output levels. If these levels do not match, turn the adjustment screw until both of output levels match together within 2 dB.

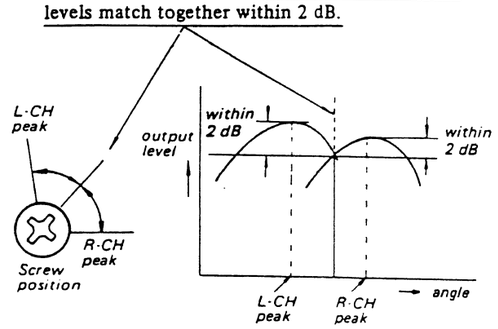

3. Phase Check
Confirm that phase difference between L-channel and R-channel is within 90°

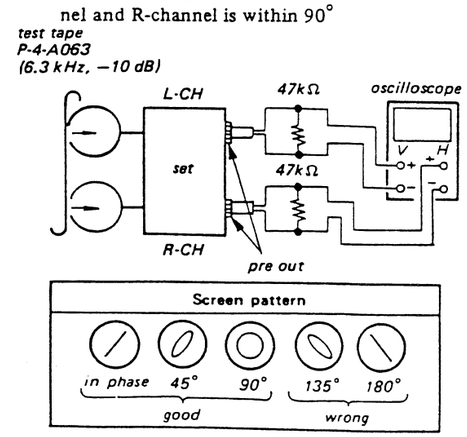

4. Repeat the above adjustment for reverse playback mode.
5. After the adjustment, lock the screw with locking compound.

SECTION 3
ADJUSTMENTS

Playback Level Adjustment

Setting:

test tape
P-4-L300
(315 Hz, 0 dB)

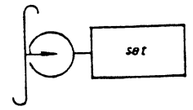

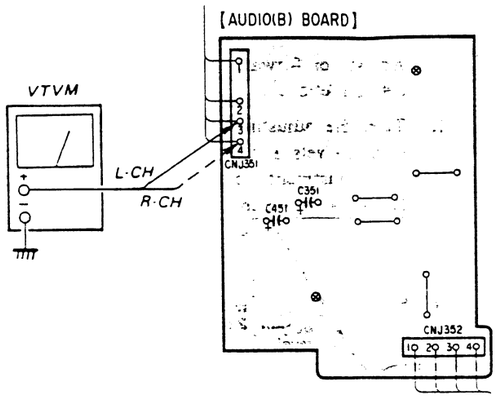

Procedure:

Adjust RV301 (L-CH) and RV401 (R-CH) to obtain −27.7dB (0.03V) reading on VTVM.

Adjustment Location: Mother board

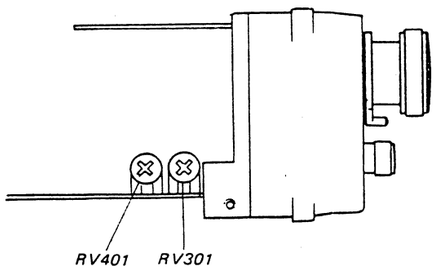

Photo Interrupter Adjustment

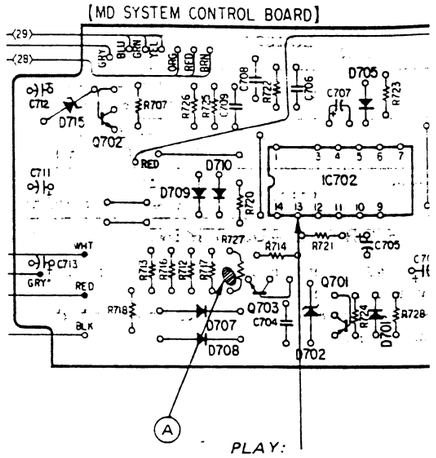

PLAY:

IC703 pin 13 L level	Solder bridge (A)
2V−1.5V	solder
less than 1.5V	unsolder

FM SECTION [The FM front-end is carefully adjusted at the factory and is supplied as one whole block for replacement.]

FM IF Offset Adjustment (E model only)

This set employs two ceramic filters (CF1, 2) which should have the same color marking to identify their center frequency. Therefore FM IF offset adjustment by diodes connection (solder bridge) is necessary to match the center frequency of the ceramic filters used with FM intermediate frequency.

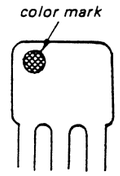

○ : solder
X : unsolder

Ceramic filter		Solder bridge		FM intermediate frequency (MHz)
Color mark	Center frequency (MHz)	A	B	
White	10.750	X	○	10.750
Red	10.700	X	X	10.700
Black	10.650	○	X	10.650

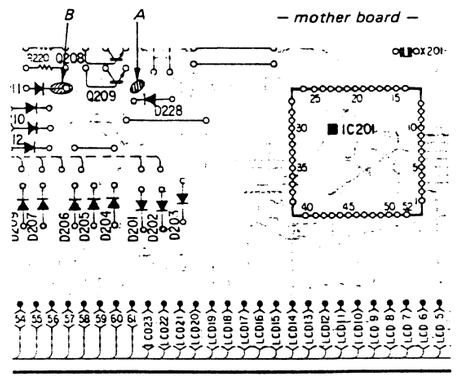

FM intermediate frequency is determined by the three types as shown above. Ceramic filters of same center frequency, i.e., of same color coding should be used for CF1 and CF2.

When replacing the ceramic filters, perform the FM Discriminator Adjustment.

Note:

This adjustment is unnecessary since the ceramic filters whose center frequency is 10.700MHz only are supplied for U.S. and Canadian model.

FM Discriminator Alignment

Setting:

BAND: FM MONO

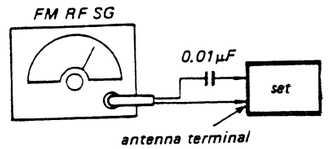

Carrier frequency: *98.1 MHz*
Output level: *60 dB (1 mV)*
Modulation: *1 kHz, 75 kHz deviation (100%)*

FM board

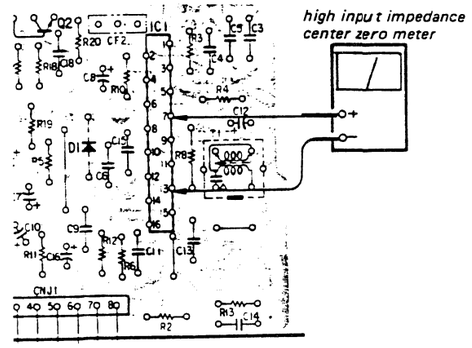

Procedure:

1. Slowly adjust the core of T1 to obtain a zero (0) V reading on high impedance center zero meter.

Adjustment Location:

FM board

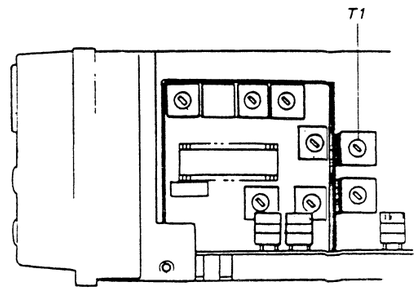

76kHz VCO Adjustment

Setup:

BAND: FM Stereo

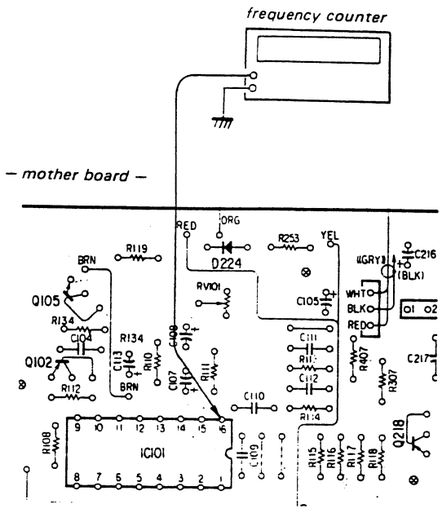

Procedure:

Adjust RV101 to obtain 76kHz ±50Hz reading on frequency counter.

Adjustment Location: Mother board

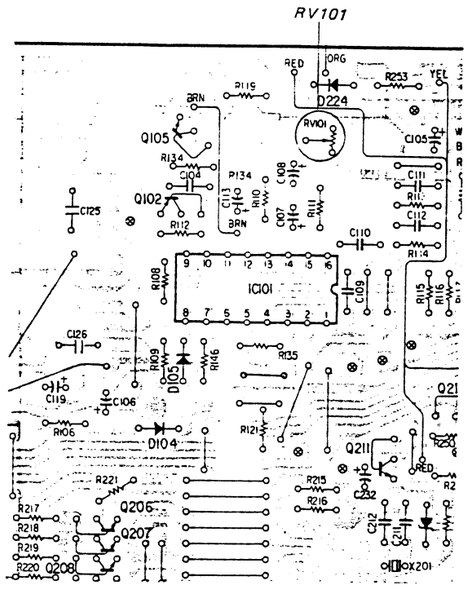

FM Auto-scan Stop Level Adjustment

Setup:

Band switch: FM MONO
Frequency: 98.1 MHz

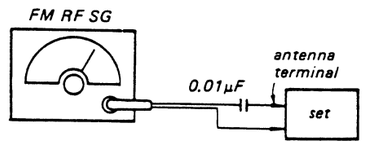

Carrier frequency: *98.1MHz*
Modulation: *no modulation*
Output level: *28dB*

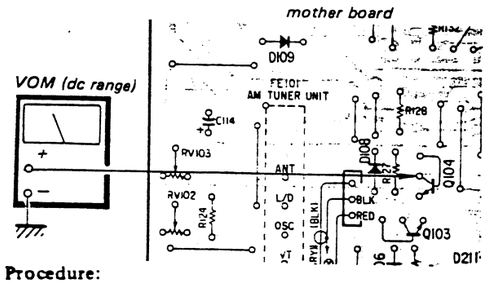

Procedure:

1. Adjust RV103 at the point where the VOM reading changes from low to high.
2. Confirm that the set stops auto-scanning with FM RF SSG output level set at 28 ±1 dB. Confirm that the set does not stop auto-scanning at level of (stop level +1) dB.

Adjustment Location: Mother board

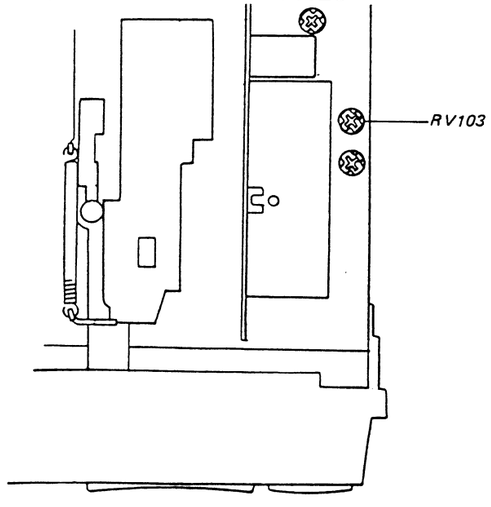

AM SECTION

AM Auto-scan Stop Level Adjustment

Note: Be sure to perform this adjustment after "FM Auto-scan Stop Adjustment".

Setup:

Band: MW
Frequency: 1000 kHz (US, Canadian model)
999 kHz (E model)

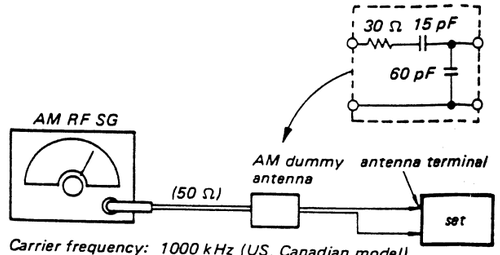

Carrier frequency: *1000 kHz (US, Canadian model)*
999 kHz (E model)
Output level: *40 dB*
Modulation: *no modulation*

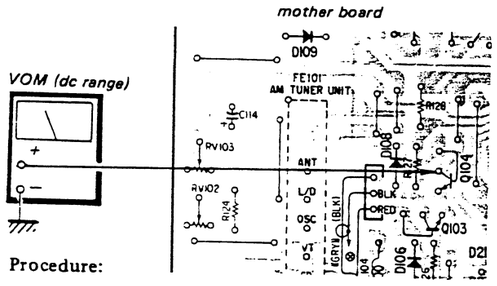

Procedure:

1. Adjust RV102 at the point where the VOM reading changes from low to high.
2. Confirm that the set stops auto-scanning with AM RF SG output level set at 38 ±1dB. Confirm that the set does not stop auto-scanning at level of (stop level +1) dB.

Adjustment Location: Mother board

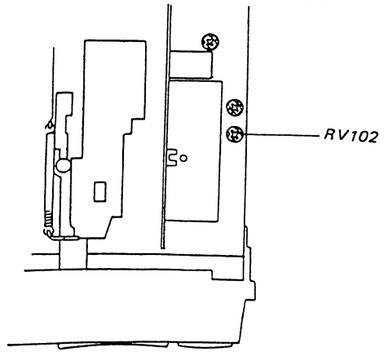

FM FRONT END (FE1)

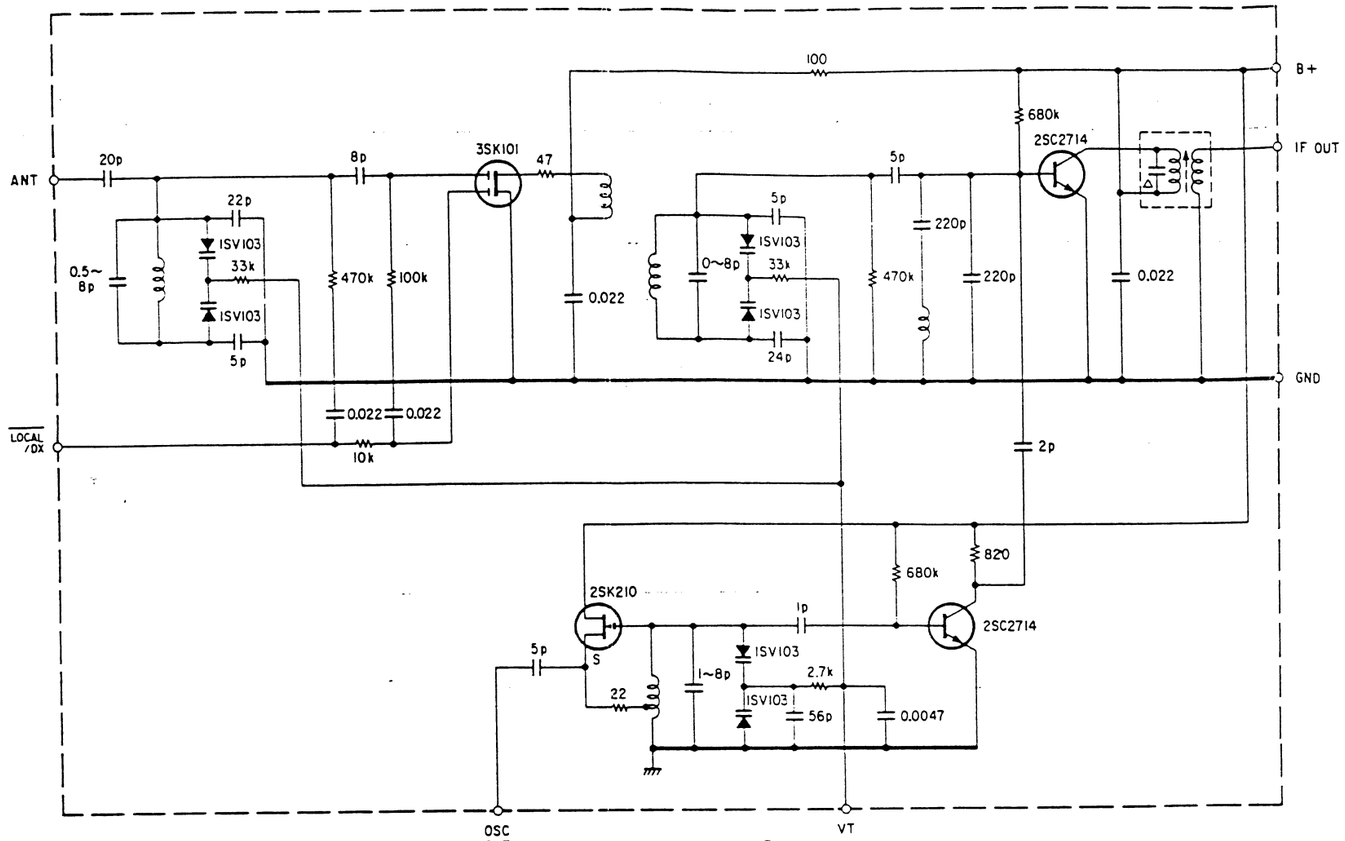

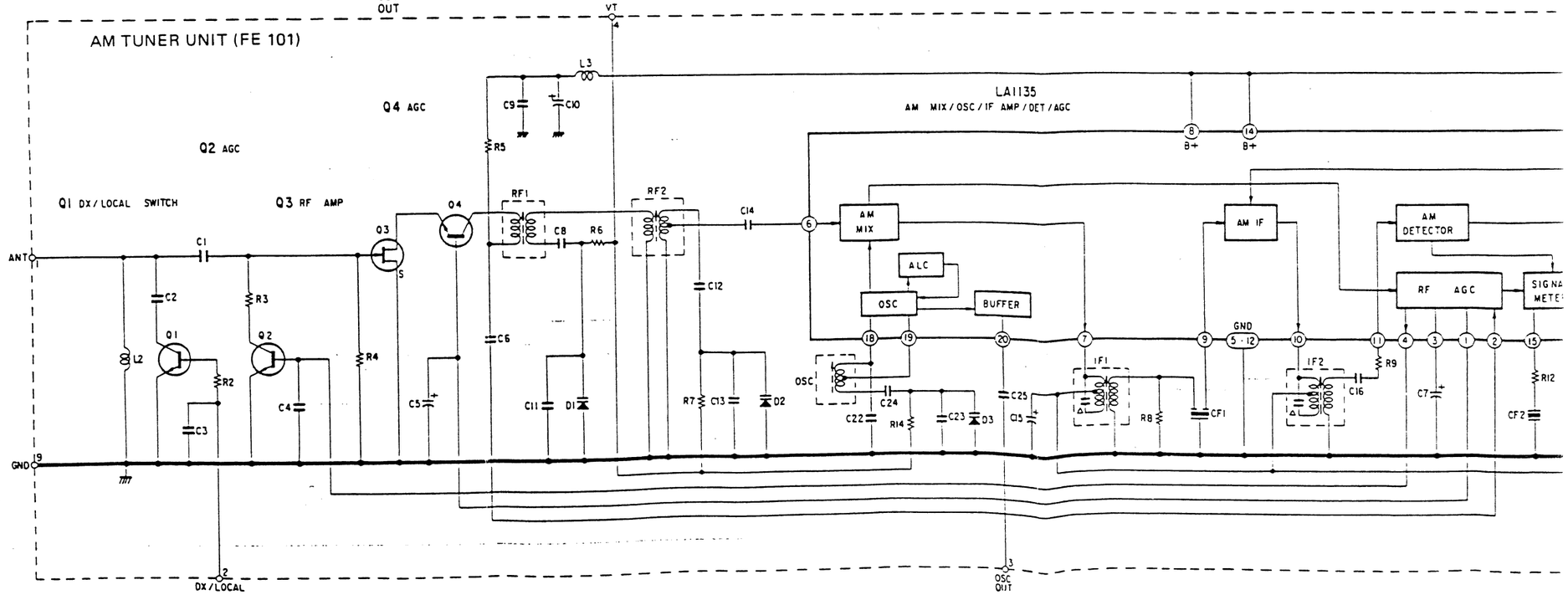

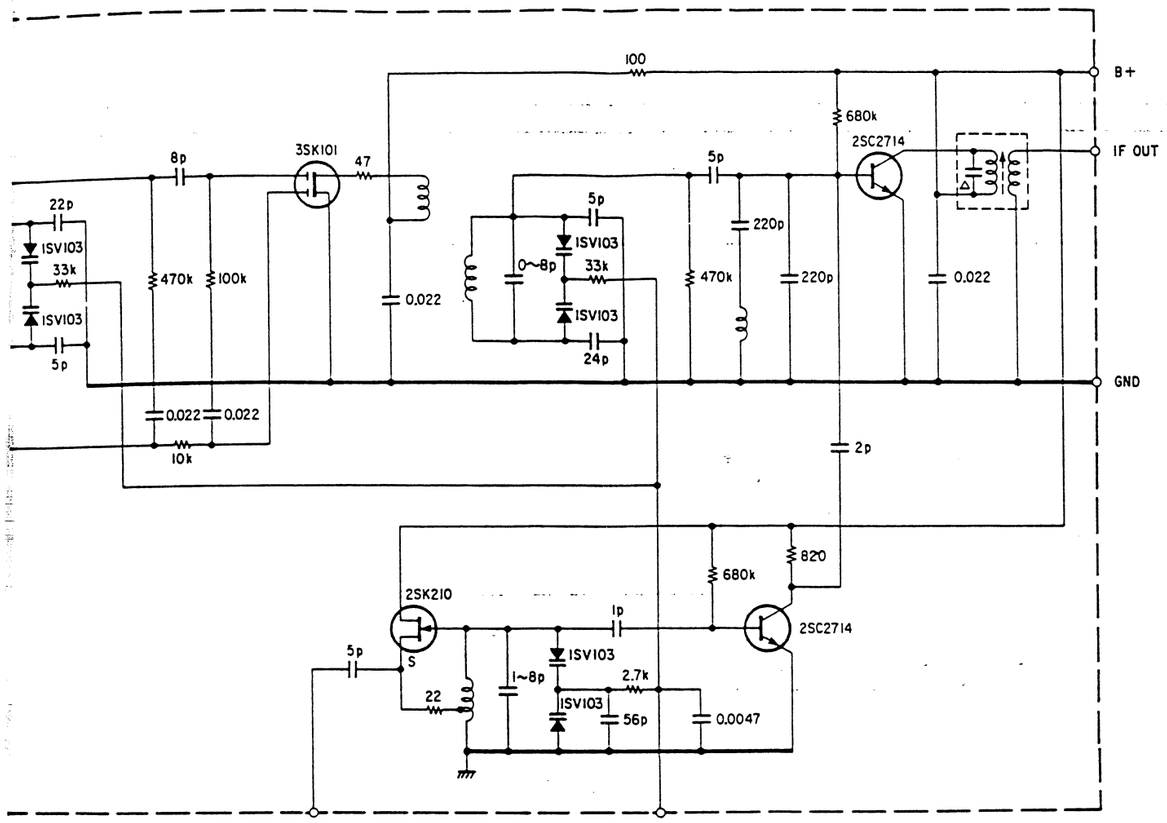
B+
IF OUT
GND
3SK101
2SC2714
2SK210
ISV103
100
680k
8p
47
5p
22p
33k
470k
100k
0.022
0~8p
24p
220p
2p
820
1p
1~8p
2.7k
56p
0.0047
22
10k
OSC OUT
VT

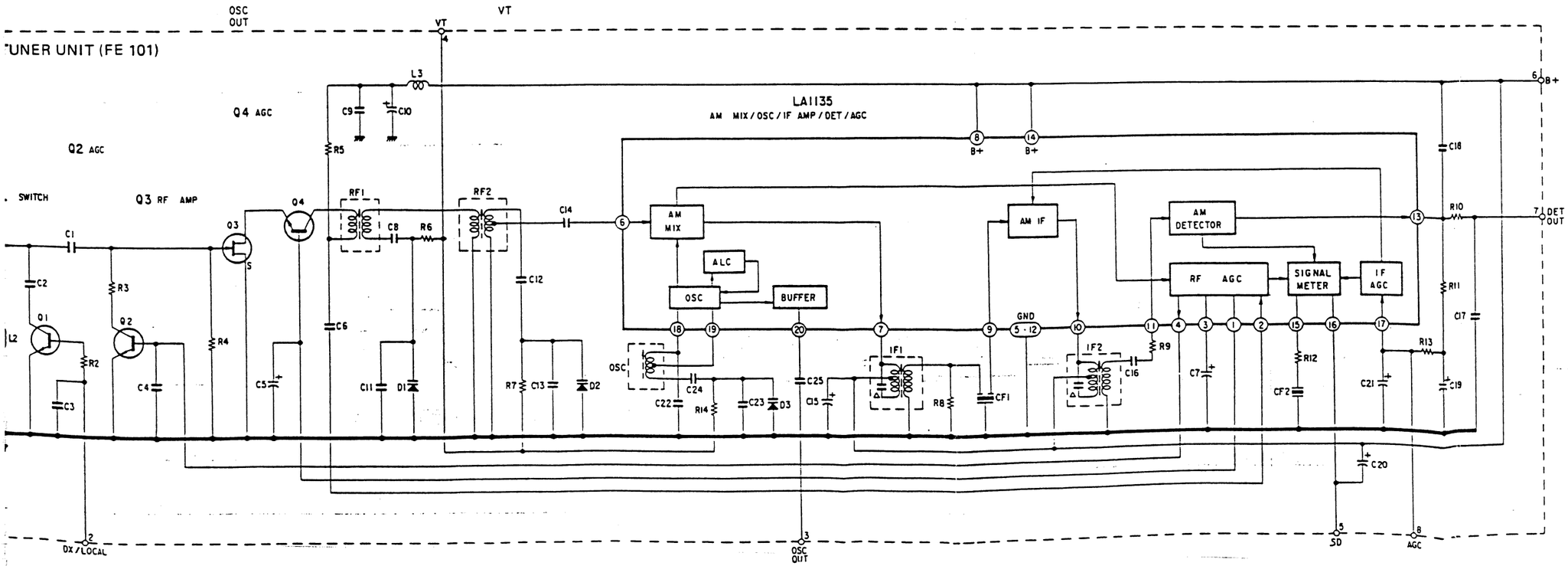
TUNER UNIT (FE 101)
LA1135
AM MIX / OSC / IF AMP / DET / AGC
Q4 AGC
Q2 AGC
Q3 RF AMP
SWITCH
AM MIX
ALC
OSC
BUFFER
AM IF
AM DETECTOR
RF AGC
SIGNAL METER
IF AGC
GND
B+
DET OUT
DX / LOCAL
OSC OUT
SD
AGC

SECTION 4
DIAGRAMS

4-1. MOUNTING DIAGRAM

● See page 36 for Semiconductor Lead Layouts.

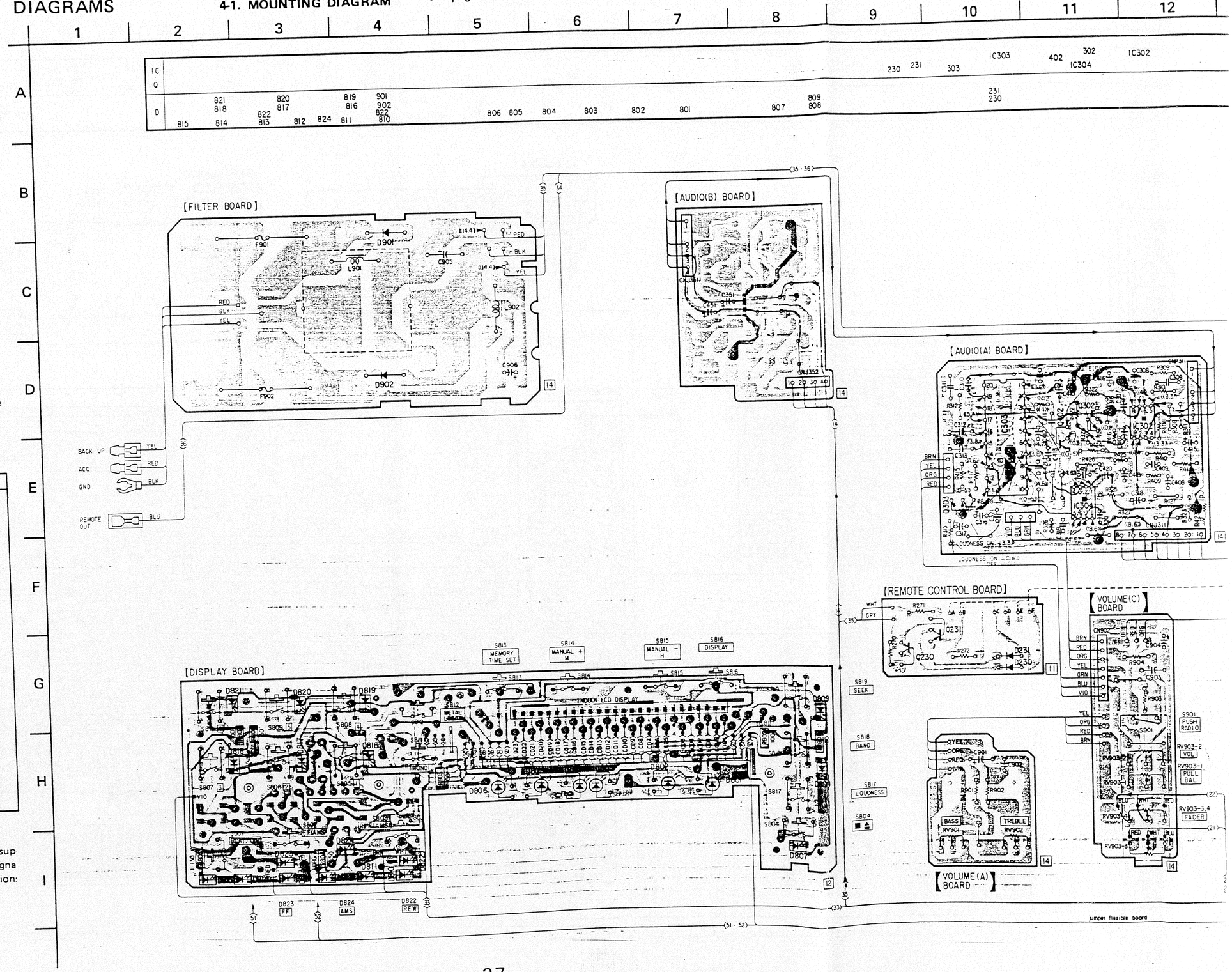

— For Mounting Diagram —

Note:

- Color code of sleeving over the end of the jacket.

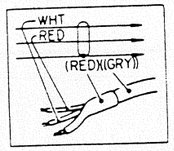

- ○—— : parts extracted from the component side.
- ●—— : parts extracted from the conductor side.
- ■ : part mounted on the conductor side.
- ——→ : signal path
- ——·→ : L-CH signal path
- ——··→ : R-CH signal path
- ▒ : component-side pattern.

— For Schematic Diagram —

Note:

- All capacitors are in μF unless otherwise noted. pF: μμF 50 WV or less are not indicated except for electrolytics and tantalums.
- All resistors are in Ω and 1/4 W or less unless otherwise specified.
- ⇨ : signal path.
- △ : internal component.
- Switch

Ref. No.	Switch	Position
S701	DIR	FWD
S702	TAPE IN	OFF
S703	OUT SW	OFF
S801	PLAY/DIR	OFF
S802	FF	OFF
S803	REW	OFF
S804	EJECT	OFF
S805	1	OFF
S806	2	OFF
S807	3	OFF
S808	4	OFF
S809	5	OFF
S810	6	OFF
S811	MONO	OFF
S812	METAL/LOCAL	OFF
S813	MEMORY/TIME SET	OFF
S814	MANUAL +/M	OFF
S815	MANUAL −/H	OFF
S816	DISPLAY	OFF
S817	LOUDNESS	OFF
S818	BAND	OFF
S819	SEEK	OFF
S901	PUSH RADIO	OFF

- ▬▬ : B+ bus.
- ▭ : adjustment for repair.
- Power voltage is 14.4V and fed with from dc power supply. Voltages are dc with respect to ground in no signal conditions with VOM (DC 50kΩ/V). Voltage variations may be noted due to normal production tolerances.

no mark : FM ( ) : AM
[ ] : RADIO < > : TAPE
≪ ≫ : RADIO or TAPE
(( )) : ACC and BACK UP

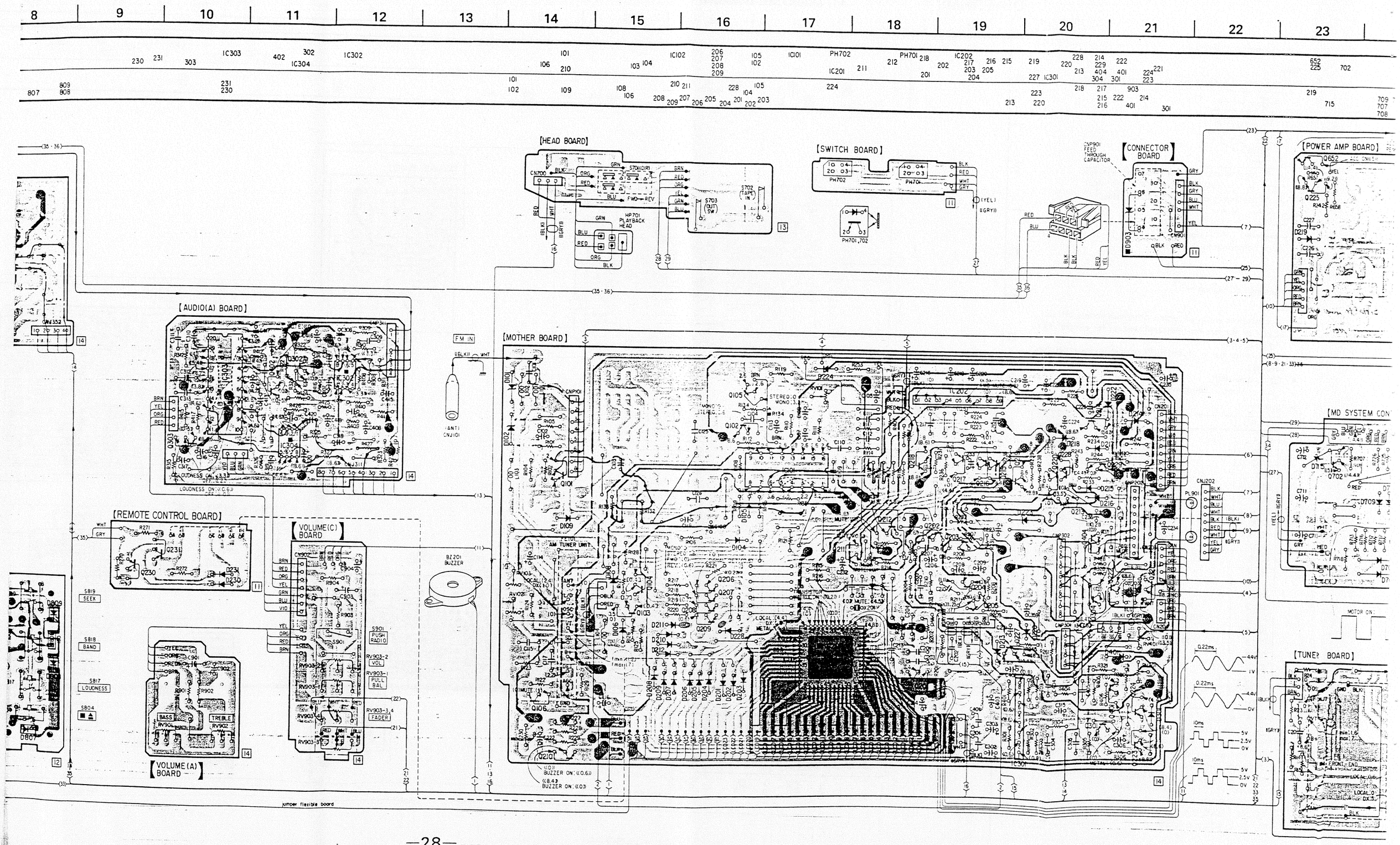
8
9
10
11
12
13
14
15
16
17
18
19
20
21
22
23
[HEAD BOARD]
[SWITCH BOARD]
[CONNECTOR BOARD]
[POWER AMP BOARD]
[AUDIO(A) BOARD]
[MOTHER BOARD]
[MD SYSTEM CON
[REMOTE CONTROL BOARD]
[VOLUME(C) BOARD]
[VOLUME(A) BOARD]
[TUNER BOARD]
HP701 PLAYBACK HEAD
S702 (TAPE IN)
S703 (OUT SW)
CNP901 FEED THROUGH CAPACITOR
FM IN
BZ201 BUZZER
S901 PUSH RADIO
RV903-2 VOL
RV903-1 PULL BAL
RV903-3,4 FADER
S819 SEEK
S818 BAND
S817 LOUDNESS
S804
BASS
TREBLE
AM TUNER UNIT
MOTOR ON
jumper flexible board

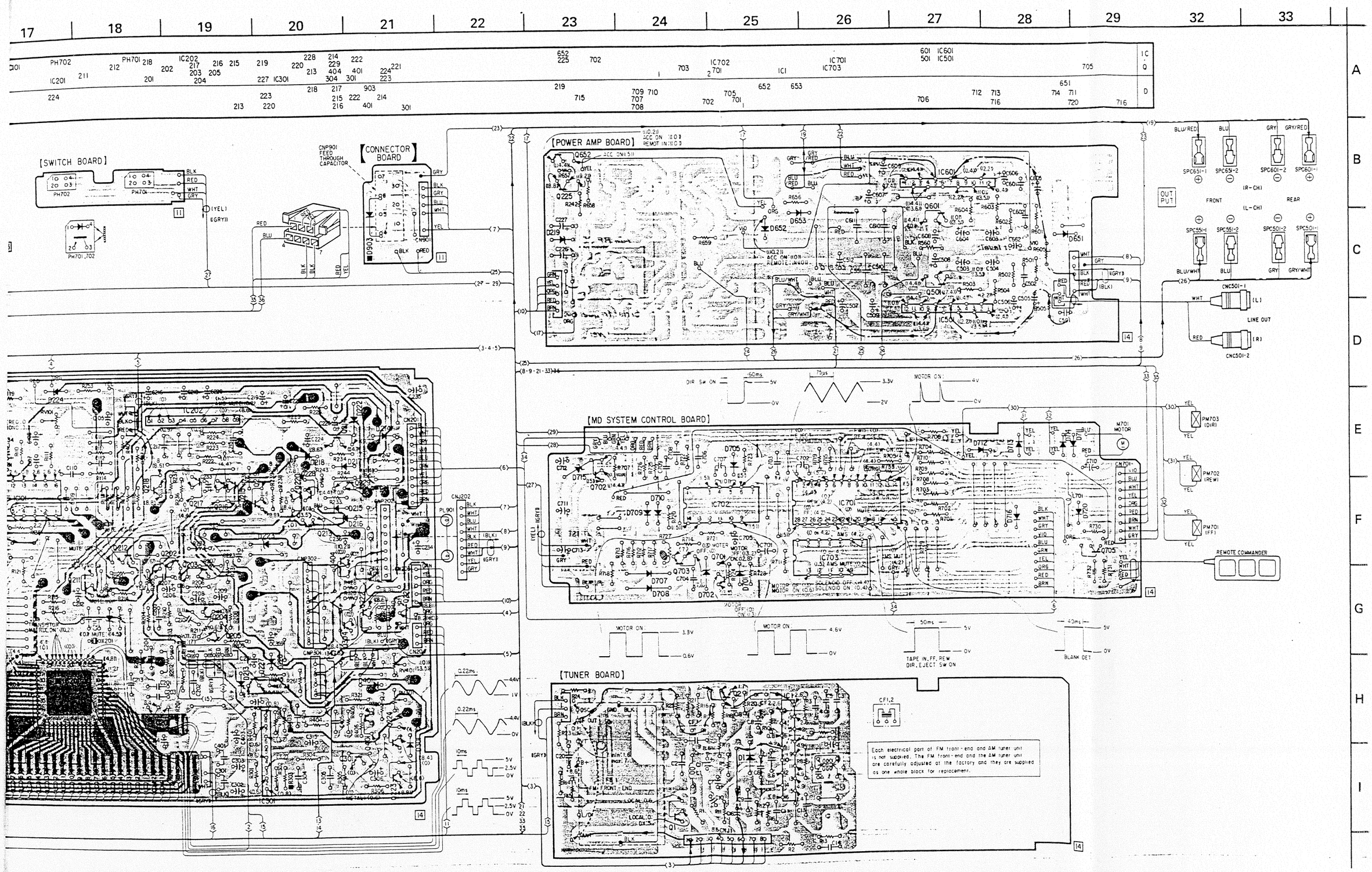
[SWITCH BOARD]
[CONNECTOR BOARD]
CNP901 FEED THROUGH CAPACITOR
[POWER AMP BOARD]
[MD SYSTEM CONTROL BOARD]
[TUNER BOARD]
OUT PUT
FRONT
REAR
(R-CH)
(L-CH)
LINE OUT
REMOTE COMMANDER
M701 MOTOR
PM703 (DIR)
PM702 (REW)
PM701 (FF)
Each electrical part of FM front-end and AM tuner unit is not supplied. The FM front-end and the AM tuner unit are carefully adjusted at the factory and they are supplied as one whole block for replacement.

4-2. SCHEMATIC DIAGRAM

● See page 26 for note and pages 23-25 for FM FRONT END and AM TUNER UNIT.

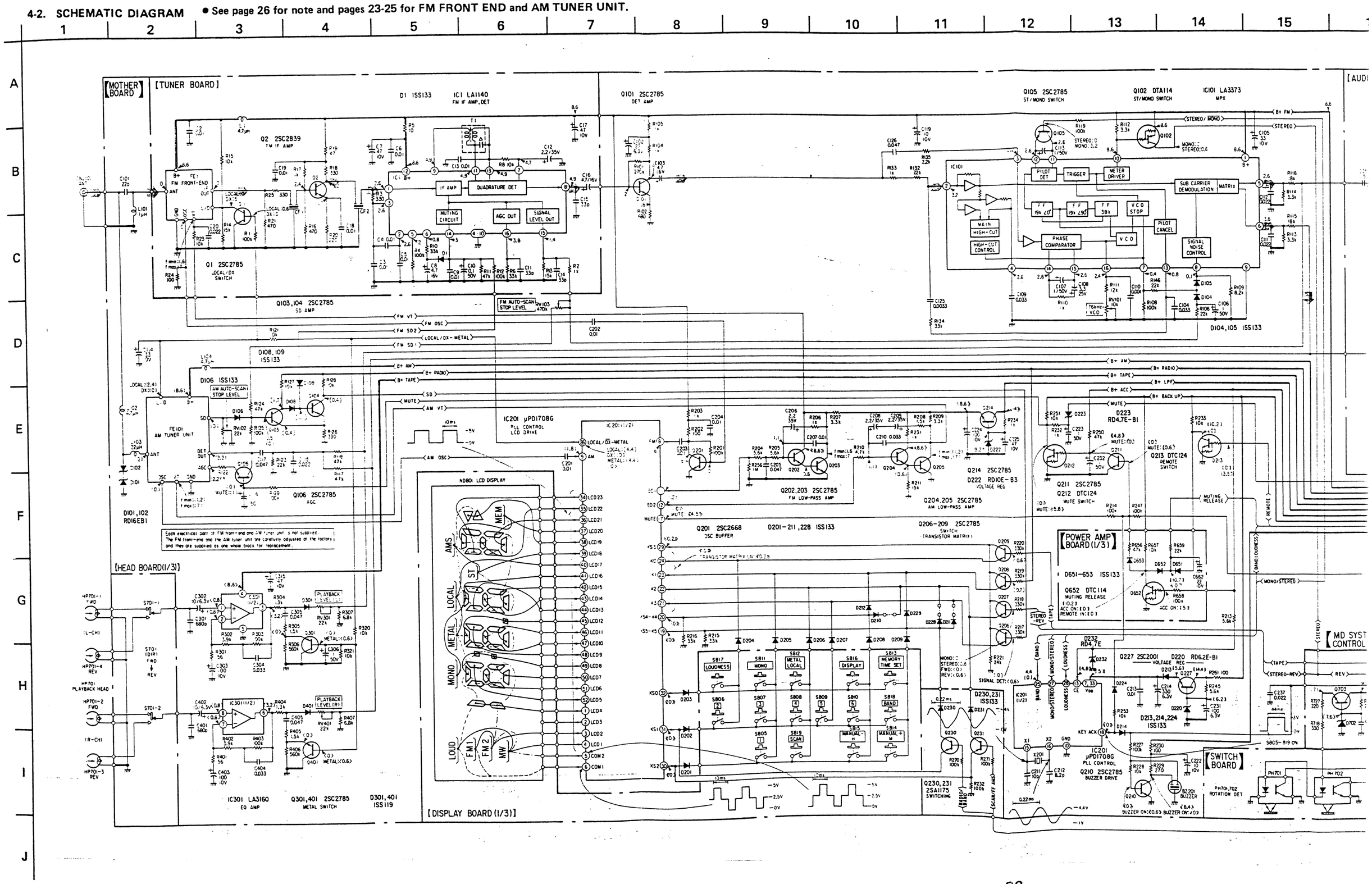

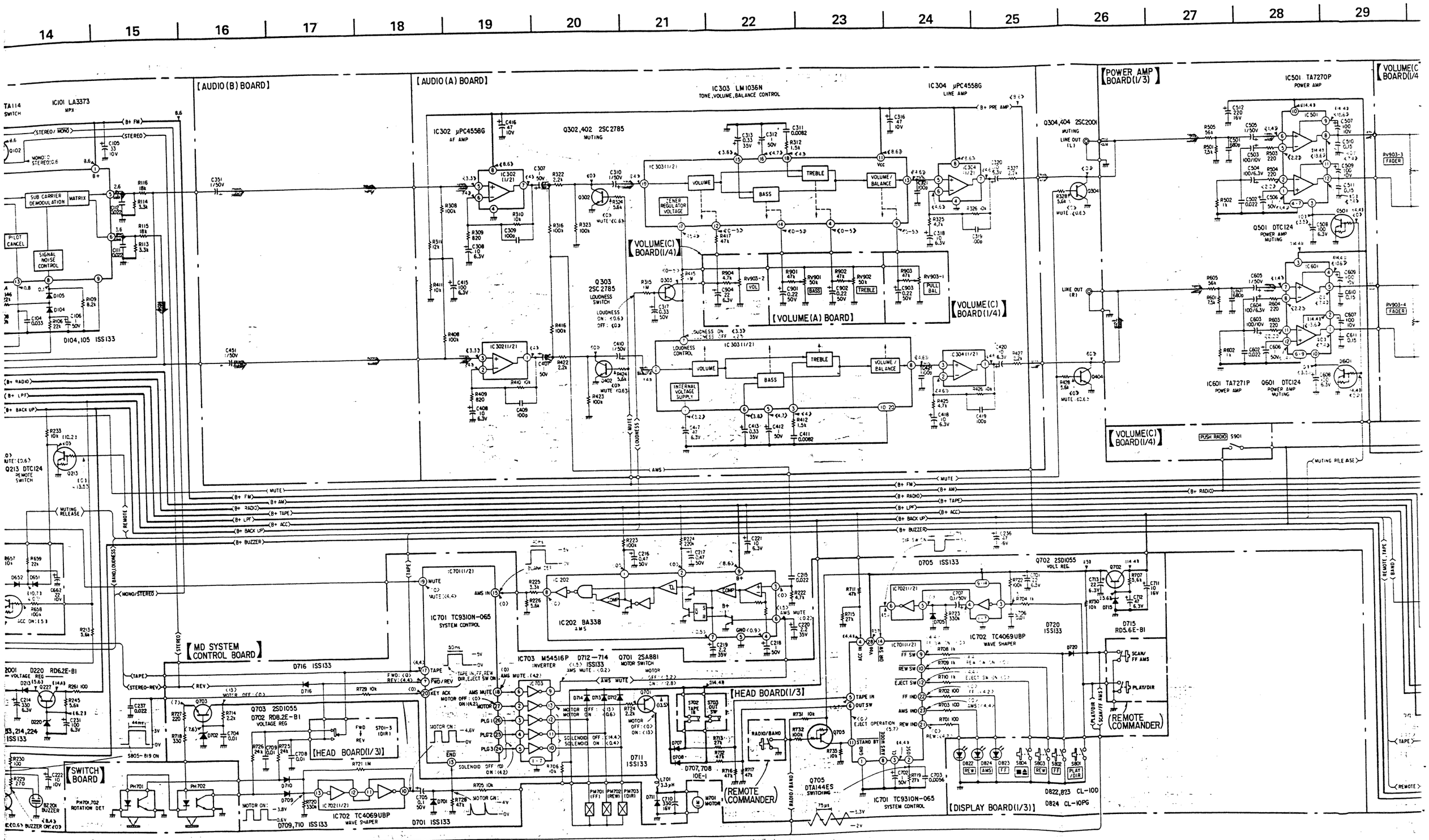
14
15
16
17
18
19
20
21
22
23
24
25
26
27
28
29
[AUDIO (B) BOARD]
[AUDIO (A) BOARD]
IC303 LM1036N
TONE, VOLUME, BALANCE CONTROL
IC304 μPC4558G
LINE AMP
IC302 μPC4558G
AF AMP
Q302,402 2SC2785
MUTING
Q303
2SC2785
LOUDNESS SWITCH
[VOLUME(C) BOARD(1/4)]
[VOLUME(A) BOARD]
[POWER AMP BOARD(1/3)]
IC501 TA7270P
POWER AMP
Q501 DTC124
POWER AMP MUTING
IC601 TA7271P
POWER AMP
Q601 DTC124
POWER AMP MUTING
Q304,404 2SC2001
MUTING
IC101 LA3373
MPX
SUB CARRIER DEMODULATION
MATRIX
PILOT CANCEL
SIGNAL NOISE CONTROL
D104,105 1SS133
Q213 DTC124
REMOTE SWITCH
[MD SYSTEM CONTROL BOARD]
IC701 TC9310N-065
SYSTEM CONTROL
IC202 BA338
AMS
IC703 M54516P
INVERTER
Q701 2SA881
MOTOR SWITCH
Q703 2SD1055
VOLTAGE REG
[HEAD BOARD(1/3)]
[SWITCH BOARD]
IC702 TC4069UBP
WAVE SHAPER
Q702 2SD1055
VOLT. REG.
D705 1SS133
D720 1SS133
D715 RD5.6E-B1
Q705 DTA144ES
SWITCHING
(REMOTE COMMANDER)
[DISPLAY BOARD(1/3)]
D822,823 CL-10D
D824 CL-10PG
PUSH RADIO S901
MUTING RELEASE

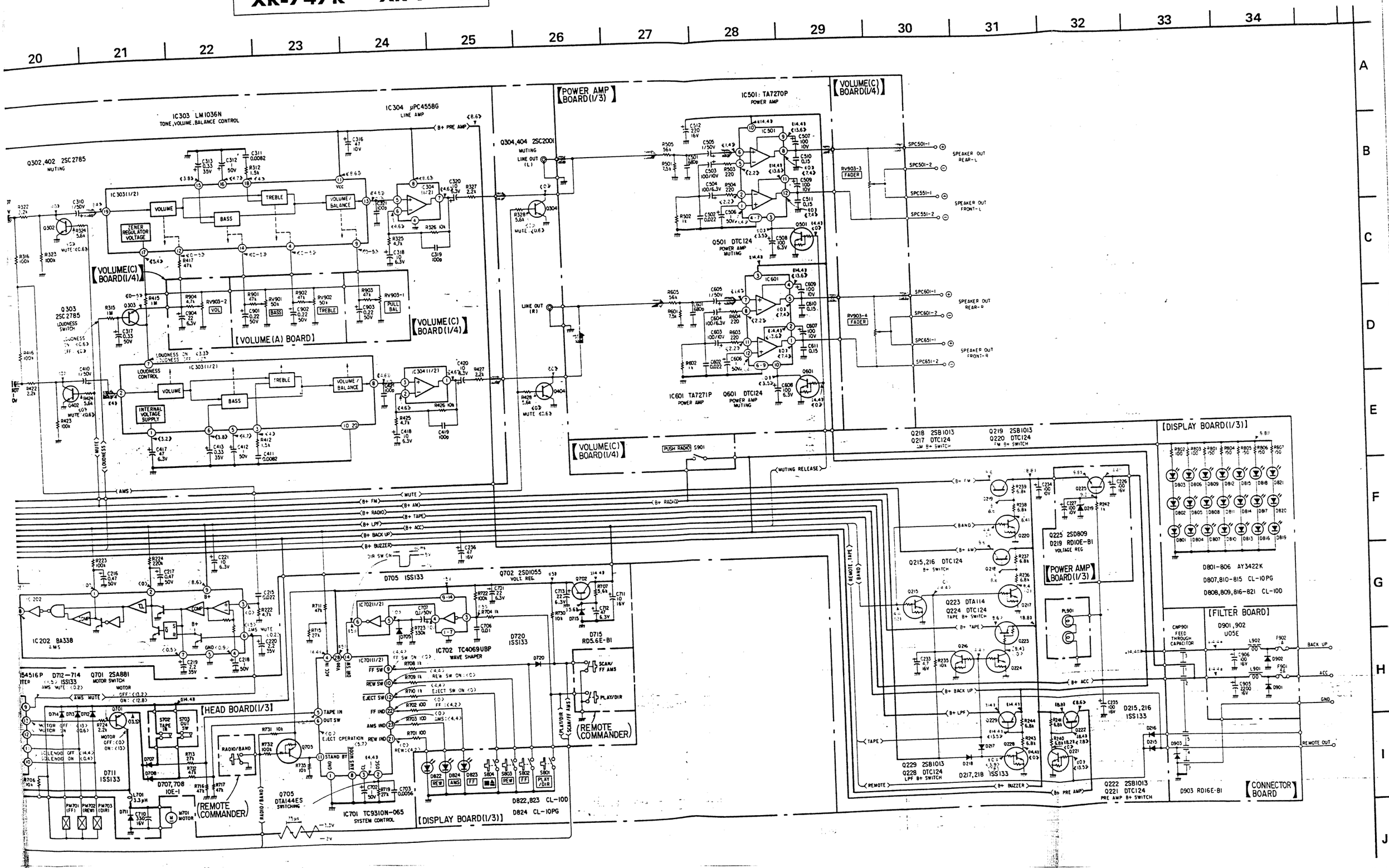

20
21
22
23
24
25
26
27
28
29
30
31
32
33
34
A
B
C
D
E
F
G
H
I
J
IC303 LM1036N
TONE, VOLUME, BALANCE CONTROL
IC304 μPC4558G
LINE AMP
Q302,402 2SC2785
MUTING
Q303 2SC2785
LOUDNESS SWITCH
[VOLUME(C) BOARD(1/4)]
[VOLUME(A) BOARD]
[VOLUME(C) BOARD(1/4)]
[VOLUME(C) BOARD(1/4)]
[POWER AMP BOARD(1/3)]
Q304,404 2SC2001
MUTING
IC501 TA7270P
POWER AMP
Q501 DTC124
POWER AMP MUTING
IC601 TA7271P
POWER AMP
Q601 DTC124
POWER AMP MUTING
[VOLUME(C) BOARD(1/4)]
SPEAKER OUT REAR-L
SPEAKER OUT FRONT-L
SPEAKER OUT REAR-R
SPEAKER OUT FRONT-R
Q218 2SB1013
Q217 DTC124
AM B+ SWITCH
Q219 2SB1013
Q220 DTC124
FM B+ SWITCH
[DISPLAY BOARD(1/3)]
D801-806 AY3422K
D807,810-815 CL-10PG
D808,809,816-821 CL-10D
Q225 2SD809
D219 RD10E-B1
VOLTAGE REG
[POWER AMP BOARD(1/3)]
Q215,216 DTC124
B+ SWITCH
Q223 DTA114
Q224 DTC124
TAPE B+ SWITCH
[FILTER BOARD]
D901,902
U05E
CNP901 FEED THROUGH CAPACITOR
D215,216
1SS133
Q229 2SB1013
Q228 DTC124
LPF B+ SWITCH
D217,218 1SS133
Q222 2SB1013
Q221 DTC124
PRE AMP B+ SWITCH
D903 RD16E-B1
[CONNECTOR BOARD]
IC202 BA338
AMS
D712-714 1SS133
Q701 2SA881
MOTOR SWITCH
[HEAD BOARD(1/3)]
D711 1SS133
D707,708 10E-1
(REMOTE COMMANDER)
Q705 DTA144ES
SWITCHING
IC701 TC9310N-065
SYSTEM CONTROL
[DISPLAY BOARD(1/3)]
D822,823 CL-10D
D824 CL-10PG
D705 1SS133
Q702 2SD1055
VOLT. REG.
IC702 TC4069UBP
WAVE SHAPER
D720 1SS133
D715 RD5.6E-B1
(REMOTE COMMANDER)

• Semiconductor Lead Layouts

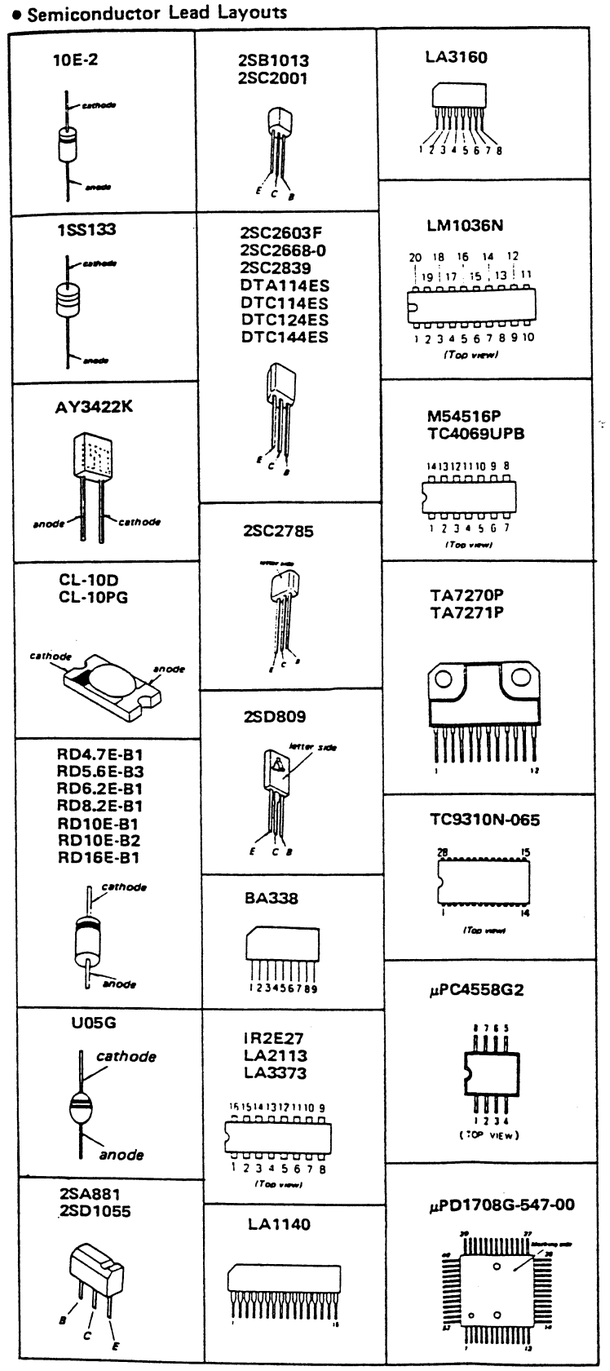

GENERAL SECTION

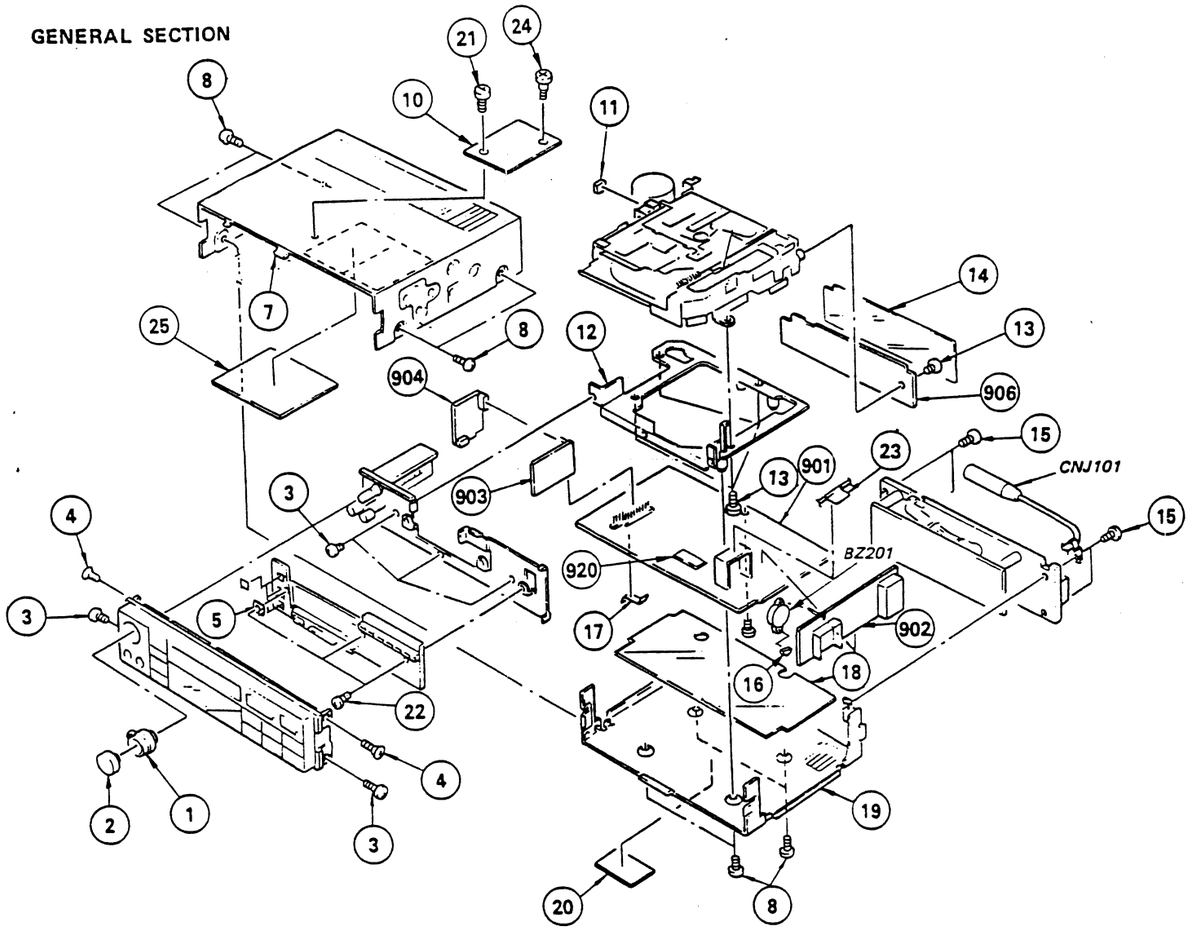

NOSE PIECE SECTION

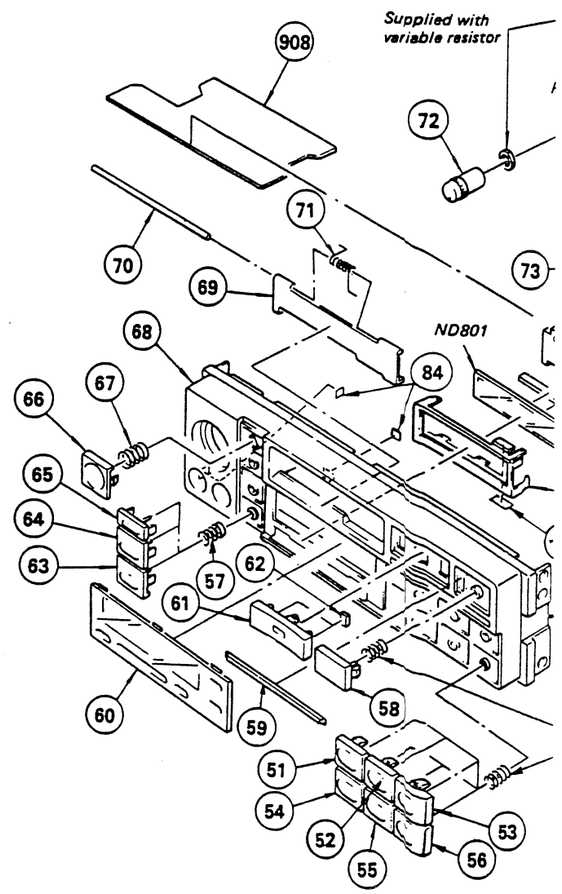

No.	Part No.	Description	Remarks
1	3-325-715-01	KNOB (A), CONTROL	
2	X-3325-703-1	KNOB (B) ASSY, CONTROL	
3	7-621-259-10	SCREW +P 2.6X3	
4	7-621-559-20	SCREW +K 2.6X4	
5	*3-325-755-01	SPRING (A)	
7	*3-325-746-01	CASE (UPPER)	
8	7-682-545-09	SCREW +B 3X4	
9	3-325-739-01	SCREW, STEP	
10	3-325-791-01	LABEL, CAUTION	
11	3-438-077-00	CUSHION, RELEASE	
12	*X-3325-701-1	BRACKET ASSY, MD	
13	7-621-773-86	SCREW +P 2.6X4	
14	*3-325-734-01	INSULATOR	
15	7-682-549-09	SCREW +B 3X10	
16	9-911-839-XX	CUSHION, FIXED	
17	*3-325-756-01	SPRING (B)	
18	*3-325-761-01	INSULATOR, CASE (LOWER)	
19	*3-325-745-01	CASE (LOWER)	
20	*3-332-102-01	LABEL, MODEL NUMBER	
21	3-327-110-01	SCREW, STOPPER	
22	7-621-255-35	SCREW +P 2X5	
23	*3-325-776-01	PLATE (A), SHIELD	
24	3-325-739-01	SCREW, STEP	
25	*3-325-750-01	LABEL	
26	3-327-119-01	SPACER (A)	
901	*A-3260-376-A	MOUNTED PCB, MOTHER	
902	*A-3266-303-A	MOUNTED PCB, TUNER	
903	*A-3270-237-A	MOUNTED PCB, AUDIO (A)	
904	*A-3270-238-A	MOUNTED PCB, AUDIO (B)	
906	*A-3279-549-A	MOUNTED PCB, SYSTEM CONTROL, MD	
920	*1-618-011-11	PC BOARD, REMOTE CONTROL	
BZ201	1-529-014-00	BUZZER, PIEZOELECTRIC	
CNJ101	1-557-942-11	CORD (WITH CONNECTOR)	
51	3-325-727-01	BUTTON, PRESET (1)	
52	3-325-727-11	BUTTON, PRESET (2)	
53	3-325-728-01	BUTTON, PRESET (3)	
54	3-325-729-01	BUTTON, PRESET (4)	
55	3-325-729-11	BUTTON, PRESET (5)	
56	3-325-730-01	BUTTON, PRESET (6)	
57	3-325-705-01	SPRING, COMPRESSION	
58	3-325-724-21	BUTTON, DIR	
59	3-325-710-11	PLATE (B), ORNAMENTAL	
60	3-325-741-11	PLATE (A), ORNAMENTAL	
61	3-325-725-21	BUTTON, AMS	
62	9-911-844-XX	SPACER (A)	
63	3-332-110-01	BUTTON, SEEK	
64	3-325-726-01	BUTTON, BAND	
65	3-325-723-01	BUTTON, LOUD	
66	3-325-722-11	BUTTON, EJECT	
67	3-325-733-01	SPRING, COMPRESSION	
68	A-3241-048-A	NOSE PIECE SUB ASSY	
69	A-3239-517-A	DOOR ASSY, CASSETTE	

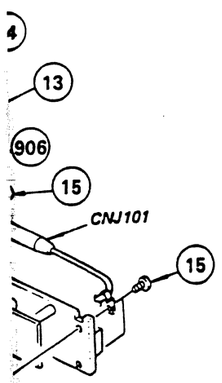

NOSE PIECE SECTION

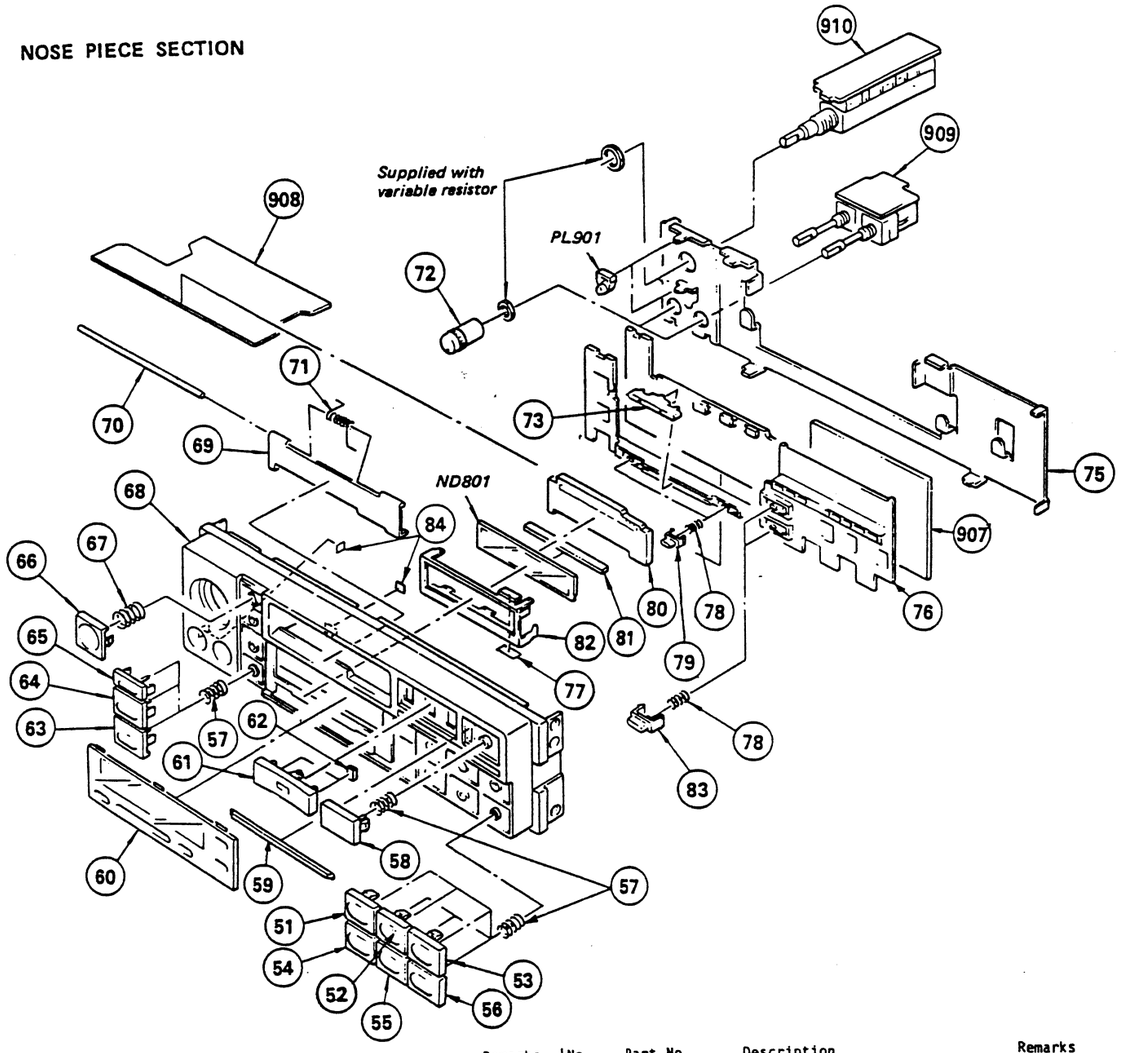

POWER AMP SECTION

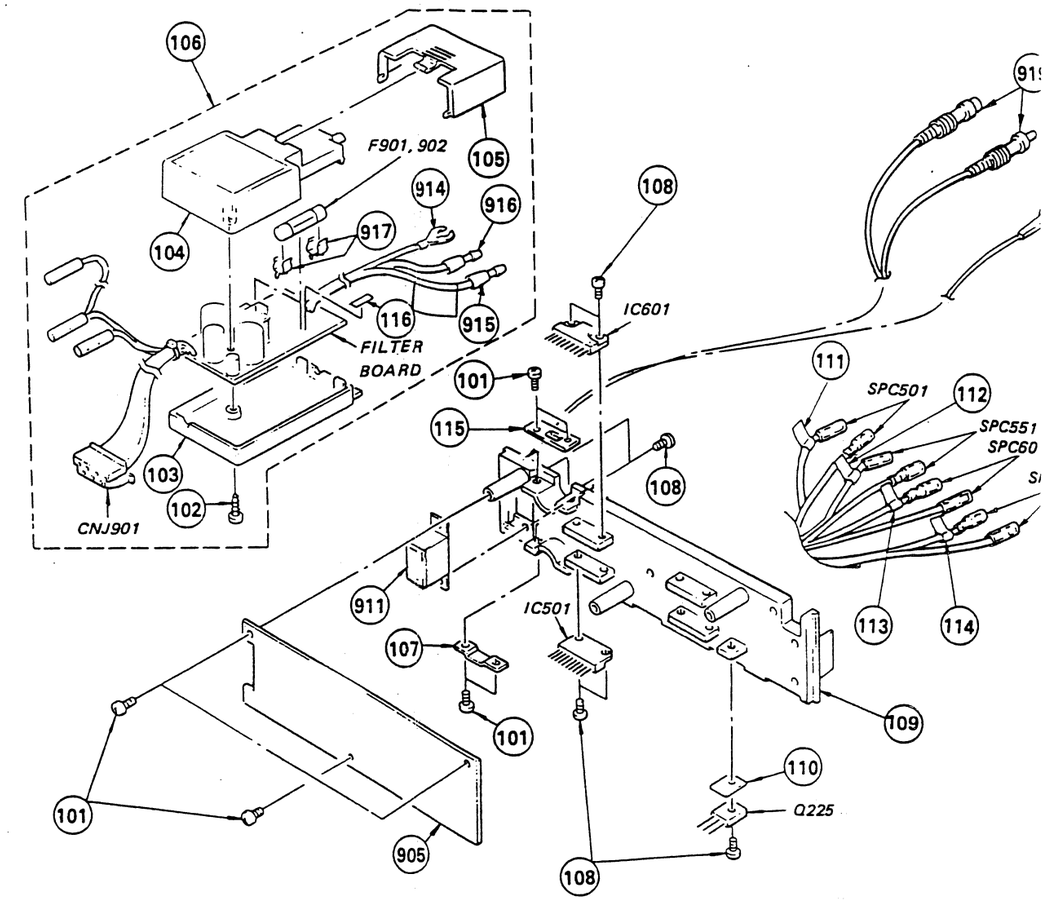

No.	Part No.	Description	Remarks
51	3-325-727-01	BUTTON, PRESET (1)	
52	3-325-727-11	BUTTON, PRESET (2)	
53	3-325-728-01	BUTTON, PRESET (3)	
54	3-325-729-01	BUTTON, PRESET (4)	
55	3-325-729-11	BUTTON, PRESET (5)	
56	3-325-730-01	BUTTON, PRESET (6)	
57	3-325-705-01	SPRING, COMPRESSION	
58	3-325-724-21	BUTTON, DIR	
59	3-325-710-11	PLATE (B), ORNAMENTAL	
60	3-325-741-11	PLATE (A), ORNAMENTAL	
61	3-325-725-21	BUTTON, AMS	
62	9-911-844-XX	SPACER (A)	
63	3-332-110-01	BUTTON, SEEK	
64	3-325-726-01	BUTTON, BAND	
65	3-325-723-01	BUTTON, LOUD	
66	3-325-722-11	BUTTON, EJECT	
67	3-325-733-01	SPRING, COMPRESSION	
68	A-3241-048-A	NOSE PIECE SUB ASSY	
69	A-3239-517-A	DOOR ASSY, CASSETTE	

No.	Part No.	Description	Remarks
70	*3-325-708-01	SHAFT, CASSETTE DOOR	
71	3-559-944-00	SPRING	
72	X-3325-702-1	KNOB (C) ASSY, CONTROL	
73	3-325-718-01	BUTTON, MANUAL	
75	*3-325-740-01	BRACKET, FRONT	
76	3-325-748-01	PANEL, CONTROL	
77	*3-325-763-01	INSULATOR, LED	
78	3-325-706-01	SPRING, COMPRESSION	
79	3-325-719-01	BUTTON (A)	
80	*3-325-713-01	ILLUMINATOR, LCD	
81	3-325-735-01	CONNECTOR, RUBBER	
82	*3-325-742-01	HOLDER, LCD	
83	3-325-720-01	BUTTON (B)	
84	9-911-863-XX	CUSHION	
907	*1-615-528-11	PC BOARD, DISPLAY	
908	*1-615-583-11	PC BOARD, TRANSLATION	
909	*1-615-535-11	PC BOARD, VOLUME (A)	
910	*1-615-542-11	PC BOARD, VOLUME (C)	
ND801	1-807-190-11	DISPLAY PANEL, LIQUID CRYSTAL	
PL901	1-518-580-11	LAMP, PILOT	

No.	Part No.	Description	Remarks
101	7-685-132-21	SCREW +P 2.6X5 TYPE2 SLIT	
102	7-685-677-29	SCREW +BVTP 3X10	
103	*3-325-773-01	FILTER (A), NOISE	
104	*3-325-774-01	FILTER (B), NOISE	
105	*3-325-775-01	FILTER (C), NOISE	
106	A-3217-225-A	FILTER ASSY	102,103,104,105,914,915, 916,917,F901,F902,CNJ901
107	*3-325-711-01	RETAINER, CORD	
108	7-682-547-04	SCREW +P 3X6	
109	*3-325-703-01	HEAT SINK	
110	3-566-928-00	SHEET, INSULATING	
111	3-325-753-01	LABEL (LCH PLUS), SPEAKER	
112	3-325-754-01	LABEL (LCH MINUS), SPEAKER	
113	3-325-751-01	LABEL (RCH PLUS), SPEAKER	
114	3-325-752-01	LABEL (RCH MINUS), SPEAKER	
115	*3-332-101-01	RETAINER, CORD	
116	*3-701-947-18	LABEL, FUSE	
905	*A-3270-330-A	MOUNTED PCB, POWER AMPLIFIER	

No.	Part No.	Description	Remark
911	*1-615-584-11	PC BOARD, CONNECTOR	
914	1-555-475-21	CORD, GND (BLK)	
915	*1-558-009-11	CORD, BACK UP (KEL)	
916	*1-558-010-11	CORD, ACC (RED)	
917	*1-533-185-11	HOLDER, FUSE	
918	1-463-704-11	REMOTE COMMANDER	
919	*1-558-496-11	CORD (WITH JACK)	
CNJ901	*1-557-944-11	CORD (WITH CONNECTOR)	
F902	1-532-414-11	FUSE (1A)	
F901	1-532-421-00	FUSE (5A)	
IC501	8-759-204-34	IC TA7270P	
IC601	8-759-204-35	IC TA7271P	
Q225	8-729-180-93	TRANSISTOR 2SD809	
SPC501	*1-557-945-11	CORD, SPEAKER (GRY/WHT)	
SPC551	*1-557-945-31	CORD, SPEAKER (BLU/WHT)	
SPC601	*1-557-945-21	CORD, SPEAKER (GRY/RED)	
SPC651	*1-557-945-41	CORD, SPEAKER (BLU/RED)	

POWER AMP SECTION

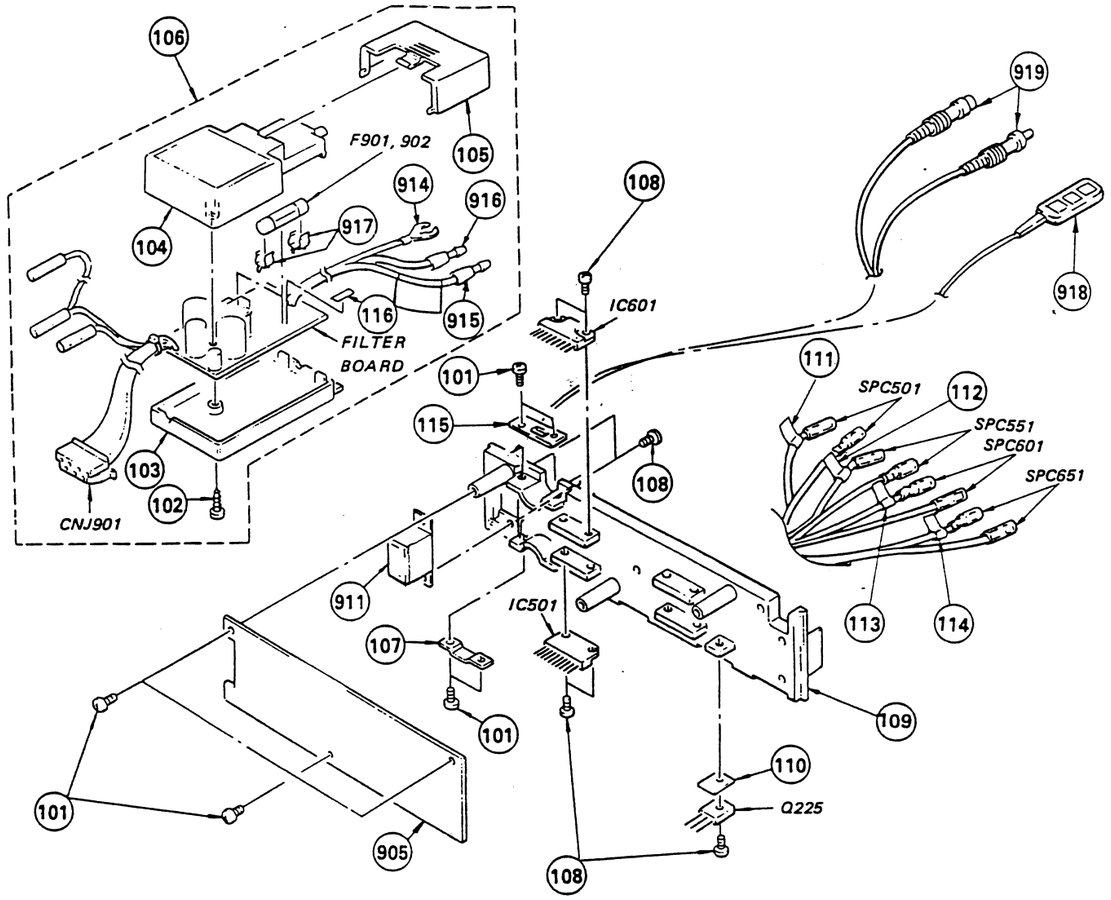

TRANSPORT MECHANISM

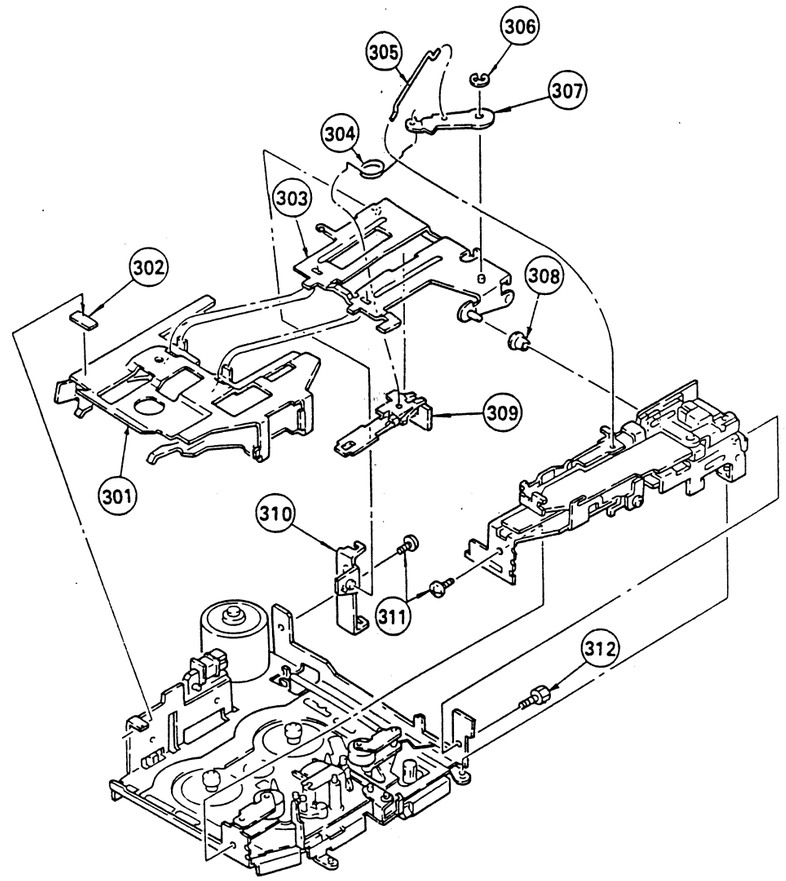

No.	Part No.	Description	Remarks
101	7-685-132-21	SCREW +P 2.6X5 TYPE2 SLIT	
102	7-685-677-29	SCREW +BVTP 3X10	
103	*3-325-773-01	FILTER (A), NOISE	
104	*3-325-774-01	FILTER (B), NOISE	
105	*3-325-775-01	FILTER (C), NOISE	
106	A-3217-225-A	FILTER ASSY	102,103,104,105,914,915, 916,917,F901,F902,CNJ901
107	*3-325-711-01	RETAINER, CORD	
108	7-682-547-04	SCREW +P 3X6	
109	*3-325-703-01	HEAT SINK	
110	3-566-928-00	SHEET, INSULATING	
111	3-325-753-01	LABEL (LCH PLUS), SPEAKER	
112	3-325-754-01	LABEL (LCH MINUS), SPEAKER	
113	3-325-751-01	LABEL (RCH PLUS), SPEAKER	
114	3-325-752-01	LABEL (RCH MINUS), SPEAKER	
115	*3-332-101-01	RETAINER, CORD	
116	*3-701-947-18	LABEL, FUSE	
905	*A-3270-330-A	MOUNTED PCB, POWER AMPLIFIER	

No.	Part No.	Description	Remarks
911	*1-615-584-11	PC BOARD, CONNECTOR	
914	1-555-475-21	CORD, GND (BLK)	
915	*1-558-009-11	CORD, BACK UP (KEL)	
916	*1-558-010-11	CORD, ACC (RED)	
917	*1-533-185-11	HOLDER, FUSE	
918	1-463-704-11	REMOTE COMMANDER	
919	*1-558-496-11	CORD (WITH JACK)	
CNJ901	*1-557-944-11	CORD (WITH CONNECTOR)	
F902	1-532-414-11	FUSE (1A)	
F901	1-532-421-00	FUSE (5A)	
IC501	8-759-204-34	IC TA7270P	
IC601	8-759-204-35	IC TA7271P	
Q225	8-729-180-93	TRANSISTOR 2SD809	
SPC501	*1-557-945-11	CORD, SPEAKER (GRY/WHT)	
SPC551	*1-557-945-31	CORD, SPEAKER (BLU/WHT)	
SPC601	*1-557-945-21	CORD, SPEAKER (GRY/RED)	
SPC651	*1-557-945-41	CORD, SPEAKER (BLU/RED)	

No.	Part No.	Description	Remarks
301	3-596-584-01	HOUSING, CASSETTE	
302	3-596-560-01	CUSHION, CH	
303	3-596-581-01	ARM ASSY, HOUSING	
304	3-596-565-01	REVERSE (SPG)	
305	3-596-563-01	ROD, OVER CENTER	
306	7-624-118-01	RING, RETAINING E-2.5	

No.	Part No.	Description	Remarks
307	*3-596-564-01	PLATE, CENTER, OVER	
308	3-596-561-01	ROLLER, H/A	
309	3-596-585-01	CATCHER	
310	*3-596-562-01	BRACKET	
311	7-621-775-00	SCREW +B 2.6X3	
312	3-596-579-01	STUD, SPECIAL	

TRANSPORT MECHANISM
(SUBCHASSIS BLOCK)

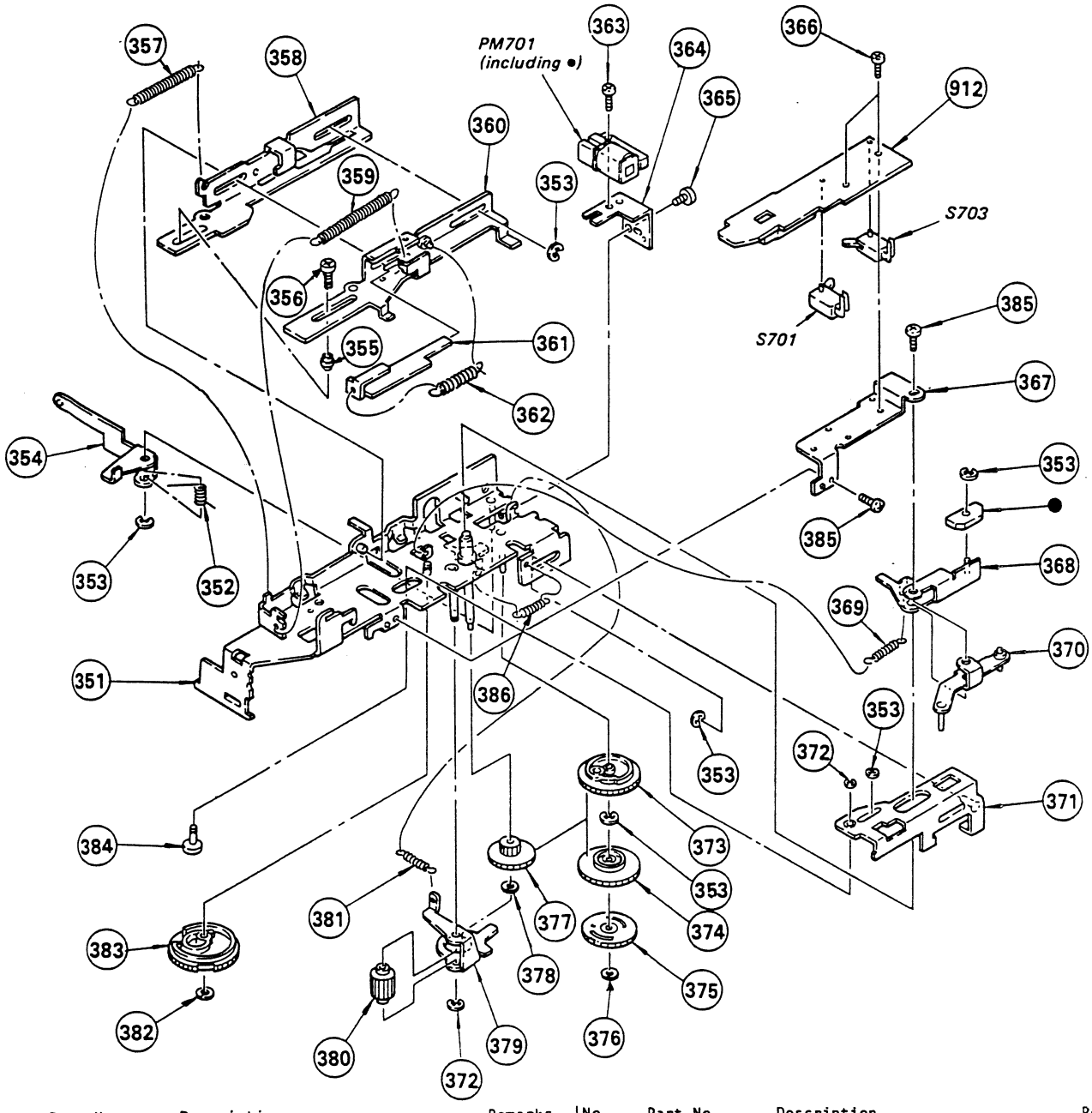

No.	Part No.	Description	Remarks
351	*3-596-547-01	CHASSIS ASSY, SUB	
352	3-596-557-01	SPRING, TRIGGER PLATE	
353	7-624-102-04	RING, RETAINING E-1.5	
354	3-596-556-01	PLATE, TRIGGER	
355	3-596-568-01	SPACER	
356	7-621-772-20	SCREW +B 2X5	
357	3-596-567-01	SPRING, EJ PLATE	
358	*3-596-566-01	PLATE, EJ	
359	3-596-570-01	SPRING, RESET PLATE	
360	*3-596-569-01	PLATE (S), RESET	
361	*3-596-571-01	PLATE, SLIDE	
362	3-596-572-01	SPRING, SLIDE PLATE	
363	7-627-554-68	SCREW, PRECISION +P 2X5.5 TYPE1	
364	*3-596-578-01	BRACKET (B), SOLENOID	
365	7-621-775-00	SCREW +B 2.6X3	
366	3-596-586-01	SCREW (M1.7X7)	
367	*3-596-574-01	ARM ASSY, SELECT	
368	*3-596-575-01	ARM ASSY, CHIP	
369	3-596-576-01	SPRING, CHIP ARM	
370	*3-596-577-01	BRACKET, SWITCH	

No.	Part No.	Description	Remarks
371	*3-596-573-01	PLATE ASSY, POWER	
372	7-624-101-01	RING, RETAINING E-1.2	
373	3-596-548-01	GEAR ASSY, EJ	
374	3-596-549-01	GEAR (A)	
375	3-596-550-01	GEAR ASSY, RVS	
376	3-570-615-00	POLY-WASHER (DIA.1.2)	
377	3-596-552-01	GEAR (B)	
378	3-701-437-21	WASHER	
379	3-596-551-01	TRIGGER, RVS	
380	3-596-553-01	GEAR (C)	
381	3-596-554-01	SPRING, RVS TRIGGER	
382	3-701-436-21	WASHER, POLYEHTHYLENE	
383	3-596-555-01	GEAR, MODE	
384	3-596-558-01	ROLLER, MODE	
385	7-621-772-00	SCREW +B 2X3	
386	3-596-559-01	SPRING, STARTER	
912	*1-615-527-11	PC BOARD, HEAD	
PM701	1-454-398-11	SOLENOID, PLUNGER	
S702	1-570-249-11	SWITCH, LEAF	
S703	1-570-250-11	SWITCH, LEAF	

TRANSPORT MECHANISM
(FRONT)

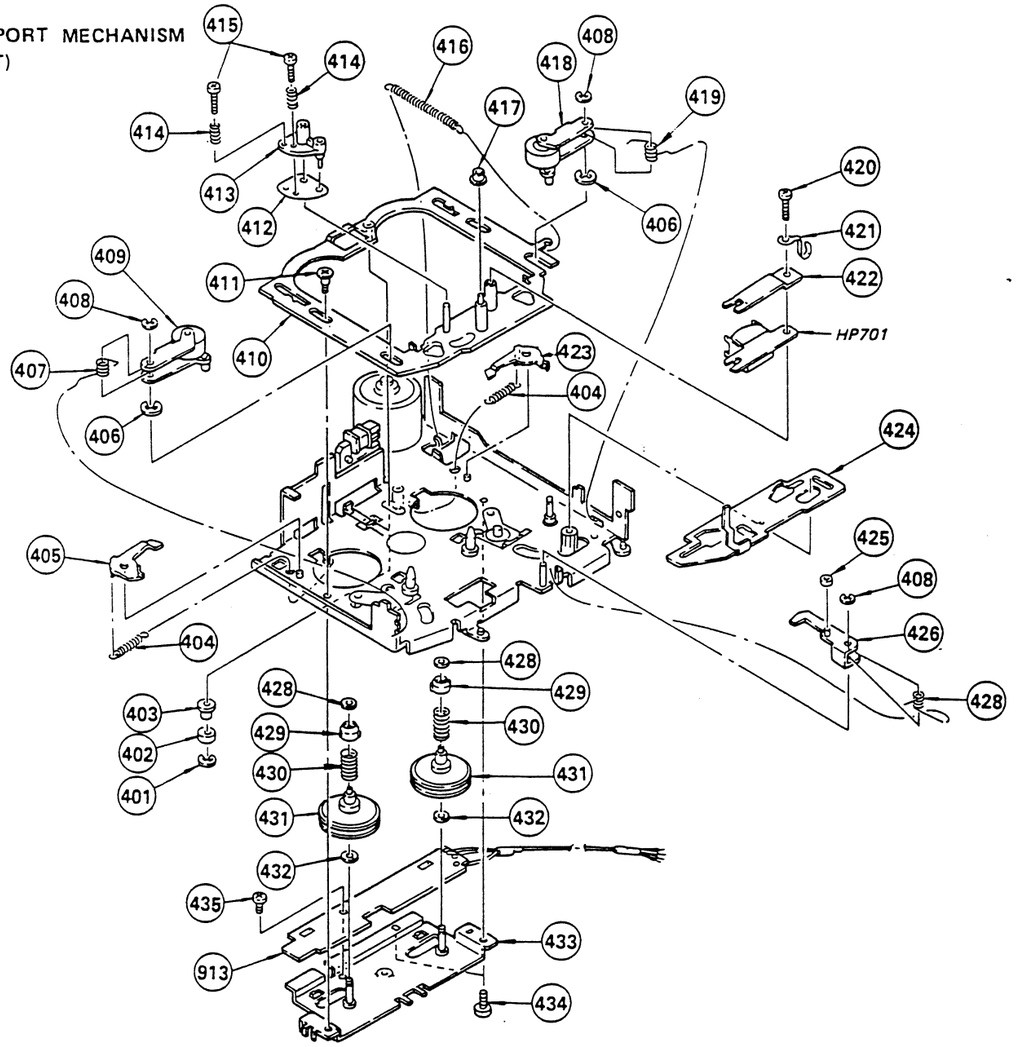

No.	Part No.	Description	Remarks
401	7-624-101-01	RING, RETAINING E-1.2	
402	3-596-512-01	ROLLER (B), H/P	
403	3-596-511-01	ROLLER (A), H/P	
404	3-596-505-01	SPRING, BRAKE PLATE	
405	*3-596-503-01	PLATE (R), BRAKE	
406	7-624-106-04	RING, RETAINING E-3	
407	3-596-524-01	SPRING, P.R ARM (R)	
408	7-624-102-04	RING, RETAINING E-1.5	
409	3-596-523-01	ARM (R) ASSY, P.R	
410	3-596-507-01	PLATE ASSY, HEAD	
411	3-596-513-01	SCREW	
412	3-596-516-01	SEAM, ADJUSTOR	
413	*3-596-517-01	ARM, AZIMUTH	
414	3-596-518-01	LOCK (SPG), AZIMUTH	
415	3-596-519-01	SCREW, AZIMUTH	
416	3-596-514-01	SPRING, H/P	
417	3-596-515-01	ROLLER (C), H/P	
418	3-596-521-01	ARM (F) ASSY, P.R	

No.	Part No.	Description	Remarks
419	3-596-522-01	SPRING, P.R ARM (F)	
420	7-621-772-10	SCREW +B 2X4	
421	*3-493-875-00	HOLDER, WIRE	
422	3-596-520-01	SPRING, AZIMUTH PLATE	
423	*3-596-502-01	PLATE (F), BRAKE	
424	*3-596-506-01	PLATE, RVS	
425	3-596-510-01	ROLLER, TIMING/A	
426	*3-596-508-01	ARM ASSY, TIMING	
427	3-596-509-01	SPRING, TIMING ARM	
428	3-701-436-11	WASHER, 1.6	
430	3-596-544-01	SPRING, REEL BUSHING	
431	3-596-543-01	BUSHING ASSY (PH), REEL	
432	3-701-437-11	WASHER	
433	*3-596-541-01	BRACKET ASSY, REEL TABLE	
434	7-621-775-00	SCREW +B 2.6X3	
435	7-621-772-00	SCREW +B 2X3	
913	3-596-542-01	PWB ASSY, SWITCH	
HP701	1-543-248-11	HEAD	

TRANSPORT MECHANISM
(REAR)

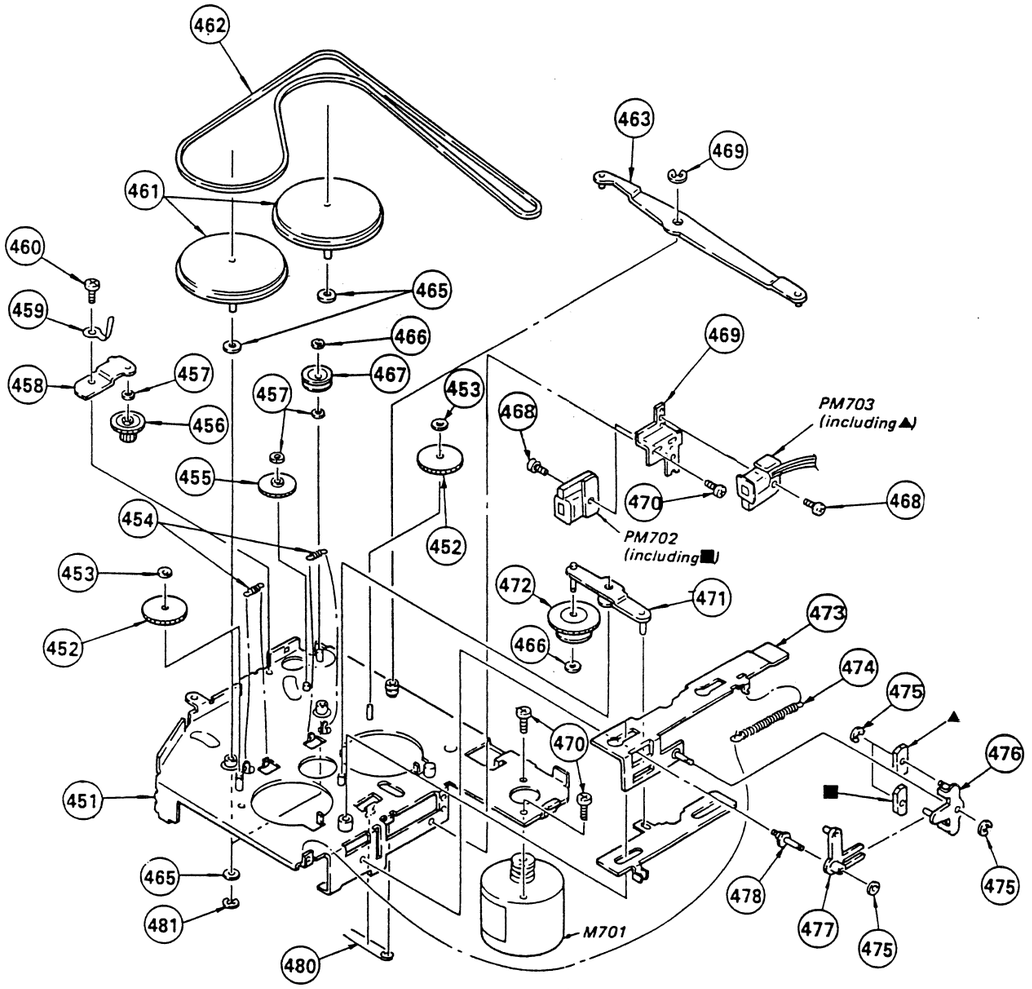

No.	Part No.	Description	Remarks
451	*3-596-504-01	CHASSIS ASSY, MAIN	
452	3-596-526-01	GEAR, IDLER	
453	3-570-615-00	POLY-WASHER (DIA.1.2)	
454	3-596-530-01	SPRING, IDLER	
455	3-596-527-01	GEAR, DIA.15.2	
456	3-596-528-01	GEAR, INPUT	
457	3-701-437-11	WASHER	
458	*3-596-529-01	GUIDE, SHAFT, GEAR	
459	7-623-507-01	LUG, 2.6	
460	7-621-775-00	SCREW +B 2.6X3	
461	3-596-546-01	FLYWHEEL ASSY	
462	3-596-582-01	BELT	
463	*3-596-538-01	ARM ASSY, POWER	
464	7-624-106-04	RING, RETAINING E-3	
465	3-590-770-31	POLY-SLIDER (A)	
466	3-701-436-21	WASHER, POLYEHTHYLENE	
467	3-596-531-01	PULLEY ASSY, TENSION	

No.	Part No.	Description	Remarks
468	7-627-554-68	SCREW, PRECISION +P 2X5.5 TYPE1	
469	*3-596-580-01	BRACKET (A), SOLENOID	
470	7-621-772-00	SCREW +B 2X3	
471	*3-596-539-01	ARM ASSY, FF	
472	3-596-540-01	GEAR ASSY, FF	
473	*3-596-533-01	PLATE ASSY, MODE	
474	3-596-535-01	SPRING, MODE PLATE	
475	7-624-102-04	RING, RETAINING E-1.5	
476	*3-596-537-01	CRANK ASSY, T	
477	3-596-536-01	CRANK, FF	
478	*3-596-534-01	SHAFT, FF CRANK	
479	*3-596-532-01	PLATE, FF	
480	3-596-525-01	ARM (SPG), FF	
481	3-590-768-00	RING (A), E	
M701	3-596-501-01	MOTOR ASSY	
PM702	1-454-398-11	SOLENOID, PLUNGER	
PM703	1-454-398-11	SOLENOID, PLUNGER	

SECTION 6
ELECTRICAL PARTS LIST

NOTE:
- Items marked " ★ " are not stocked since they are seldom required for routine service. Some delay should be anticipated when ordering these items.
- If there are two or more same circuitsin a set such as a stereophonic machine, only typical circuit parts may be indicated and capacitors and resistors in other same circuits may be omitted.

CAPACITORS:
MF:uF, PF:uuF.

RESISTORS
- All resistors are in ohms.
- F : nonflammable

COILS
- MMH : mH, UH : uH

SEMICONDUCTORS
In each case, U : u, for example:
UA...: uA..., UPA...: uPA..., UPC...: uPC,
UPD...: uPD...

ELECTRICAL PARTS

Ref.No.	Part No.	Description
901	*A-3260-376-A	MOUNTED PCB, MOTHER
902	*A-3266-303-A	MOUNTED PCB, TUNER
903	*A-3270-237-A	MOUNTED PCB, AUDIO (A)
904	*A-3270-238-A	MOUNTED PCB, AUDIO (B)
905	*A-3270-330-A	MOUNTED PCB, POWER AMPLIFIER
906	*A-3279-549-A	MOUNTED PCB, SYSTEM CONTROL, MD
907	*1-615-528-11	PC BOARD, DISPLAY
908	*1-615-583-11	PC BOARD, TRANSLATION
909	*1-615-535-11	PC BOARD, VOLUME (A)
910	*1-615-542-11	PC BOARD, VOLUME (C)
911	*1-615-584-11	PC BOARD, CONNECTOR
912	*1-615-527-11	PC BOARD, HEAD
913	3-596-542-01	PWB ASSY, SWITCH
914	1-555-475-21	CORD, GND (BLK)
915	*1-558-009-11	CORD, BACK UP (KEL)
916	*1-558-010-11	CORD, ACC (RED)
917	*1-533-185-11	HOLDER, FUSE
918	1-463-704-11	REMOTE COMMANDER
919	*1-558-496-11	CORD (WITH JACK)
920	*1-618-011-11	PC BOARD, REMOTE CONTROL
BZ201	1-529-014-00	BUZZER, PIEZOELECTRIC
C2	1-162-306-31	CERAMIC 0.01MF 30% 16V
C3	1-162-306-31	CERAMIC 0.01MF 30% 16V
C4	1-162-306-31	CERAMIC 0.01MF 30% 16V
C5	1-162-306-31	CERAMIC 0.01MF 30% 16V
C6	1-162-306-31	CERAMIC 0.01MF 30% 16V
C7	1-123-306-00	ELECT 47MF 20% 10V
C8	1-124-245-00	ELECT 4.7MF 20% 16V
C9	1-162-306-31	CERAMIC 0.01MF 30% 16V
C10	1-124-249-00	ELECT 0.1MF 20% 50V
C11	1-162-211-31	CERAMIC 33PF 5% 50V
C12	1-124-257-00	ELECT 2.2MF 20% 35V
C13	1-162-306-31	CERAMIC 0.01MF 30% 16V
C14	1-162-211-31	CERAMIC 33PF 5% 50V
C15	1-162-211-31	CERAMIC 33PF 5% 50V
C16	1-124-245-00	ELECT 4.7MF 20% 16V
C17	1-123-306-00	ELECT 47MF 20% 10V

ELECTRICAL PARTS

Ref.No.	Part No.	Description
C18	1-162-306-31	CERAMIC 0.01MF 30% 16V
C19	1-162-306-31	CERAMIC 0.01MF 30% 16V
C20	1-101-005-00	CERAMIC 0.022MF 50V
C101	1-162-207-31	CERAMIC 22PF 5% 50V
C102	1-124-222-00	ELECT 22MF 20% 6.3V
C103	1-124-245-00	ELECT 4.7MF 20% 16V
C104	1-136-159-00	FILM 0.033MF 5% 50V
C105	1-124-229-00	ELECT 33MF 20% 10V
C106	1-124-255-00	ELECT 1MF 20% 50V
C107	1-124-255-00	ELECT 1MF 20% 50V
C108	1-124-258-00	ELECT 3.3MF 20% 25V
C109	1-136-159-00	FILM 0.033MF 5% 50V
C110	1-136-141-00	FILM 0.001MF 5% 50V
C111	1-136-157-00	FILM 0.022MF 5% 50V
C112	1-136-157-00	FILM 0.022MF 5% 50V
C113	1-124-255-00	ELECT 1MF 20% 50V
C114	1-124-229-00	ELECT 33MF 20% 10V
C115	1-161-055-00	CERAMIC 0.022MF 10% 50V
C116	1-124-255-00	ELECT 1MF 20% 50V
C117	1-136-161-00	FILM 0.047MF 5% 50V
C119	1-162-288-31	CERAMIC 330PF 10% 50V
C125	1-162-303-31	CERAMIC 0.0033MF 30% 16V
C126	1-136-161-00	FILM 0.047MF 5% 50V
C201	1-162-306-31	CERAMIC 0.01MF 30% 16V
C202	1-162-306-31	CERAMIC 0.01MF 30% 16V
C203	1-162-306-31	CERAMIC 0.01MF 30% 16V
C204	1-162-306-31	CERAMIC 0.01MF 30% 16V
C205	1-136-161-00	FILM 0.047MF 5% 50V
C206	1-124-257-00	ELECT 2.2MF 20% 35V
C207	1-161-013-00	CERAMIC 0.01MF 10% 25V
C208	1-124-257-00	ELECT 2.2MF 20% 35V
C209	1-124-257-00	ELECT 2.2MF 20% 35V
C210	1-136-159-00	FILM 0.033MF 5% 50V
C211	1-162-199-31	CERAMIC 10PF 5% 50V
C212	1-162-198-31	CERAMIC 8.2PF 10% 50V
C213	1-162-306-31	CERAMIC 0.01MF 30% 16V
C214	1-124-442-00	ELECT 330MF 20% 6.3V

ELECTRICAL PARTS

Ref.No.	Part No.	Description
C215	1-136-157-00	FILM 0.022MF 5% 50V
C216	1-124-253-00	ELECT 0.47MF 20% 50V
C217	1-124-253-00	ELECT 0.47MF 20% 50V
C218	1-124-255-00	ELECT 1MF 20% 50V
C219	1-124-257-00	ELECT 2.2MF 20% 35V
C220	1-124-257-00	ELECT 2.2MF 20% 35V
C221	1-124-233-00	ELECT 10MF 20% 6.3V
C222	1-124-233-00	ELECT 10MF 20% 10V
C223	1-124-255-00	ELECT 1MF 20% 50V
C224	1-124-584-00	ELECT 100MF 20% 10V
C225	1-124-236-00	ELECT 47MF 20% 10V
C226	1-123-333-00	ELECT 100MF 20% 16V
C227	1-124-584-00	ELECT 100MF 20% 10V
C231	1-124-225-00	ELECT 100MF 20% 6.3V
C232	1-124-255-00	ELECT 1MF 20% 50V
C233	1-124-245-00	ELECT 4.7MF 20% 16V
C234	1-124-584-00	ELECT 100MF 20% 10V
C235	1-123-333-00	ELECT 100MF 20% 16V
C236	1-124-236-00	ELECT 47MF 20% 16V
C237	1-161-494-00	CERAMIC 0.022MF 30% 25V
C301	1-130-469-00	MYLAR 680PF 5% 50V
C302	1-124-233-00	ELECT 10MF 20% 6.3V
C303	1-124-584-00	ELECT 100MF 20% 10V
C304	1-136-159-00	FILM 0.033MF 5% 50V
C305	1-136-161-00	FILM 0.047MF 5% 50V
C306	1-124-255-00	ELECT 1MF 20% 50V
C307	1-124-255-00	ELECT 1MF 20% 50V
C308	1-124-233-00	ELECT 10MF 20% 6.3V
C309	1-162-282-31	CERAMIC 100PF 10% 50V
C310	1-124-255-00	ELECT 1MF 20% 50V
C311	1-130-482-00	MYLAR 0.0082MF 5% 50V
C312	1-124-255-00	ELECT 1MF 20% 50V
C313	1-131-344-00	TANTALUM 0.33MF 10% 35V
C315	1-124-236-00	ELECT 47MF 20% 10V
C316	1-124-236-00	ELECT 47MF 20% 10V
C317	1-124-252-00	ELECT 0.33MF 20% 50V
C318	1-124-221-61	ELECT 10MF 20% 6.3V
C319	1-102-106-00	CERAMIC 100PF 10% 50V
C320	1-124-330-00	ELECT 10MF 20% 6.3V
C321	1-102-106-00	CERAMIC 100PF 10% 50V
C351	1-124-255-00	ELECT 1MF 20% 50V
C359	1-124-255-00	ELECT 1MF 20% 50V
C401	1-130-469-00	MYLAR 680PF 5% 50V
C402	1-124-233-00	ELECT 10MF 20% 6.3V
C403	1-124-584-00	ELECT 100MF 20% 10V
C404	1-136-159-00	FILM 0.033MF 5% 50V
C405	1-136-161-00	FILM 0.047MF 5% 50V
C407	1-124-255-00	ELECT 1MF 20% 50V
C408	1-124-221-61	ELECT 10MF 20% 6.3V
C409	1-102-106-00	CERAMIC 100PF 10% 50V
C410	1-124-255-00	ELECT 1MF 20% 50V
C411	1-130-482-00	MYLAR 0.0082MF 5% 50V
C412	1-124-255-00	ELECT 1MF 20% 50V
C413	1-131-344-00	TANTALUM 0.33MF 10% 35V
C415	1-124-225-00	ELECT 100MF 20% 6.3V
C416	1-124-236-00	ELECT 47MF 20% 10V
C417	1-124-224-00	ELECT 47MF 20% 6.3V

ELECTRICAL PARTS

Ref.No.	Part No.	Description
C418	1-124-233-00	ELECT 10MF 20% 6.3V
C419	1-102-106-00	CERAMIC 100PF 10% 50V
C420	1-124-233-00	ELECT 10MF 20% 6.3V
C421	1-102-106-00	CERAMIC 100PF 10% 50V
C451	1-124-255-00	ELECT 1MF 20% 50V
C501	1-102-116-00	CERAMIC 680PF 10% 50V
C502	1-136-157-00	FILM 0.022MF 5% 50V
C503	1-124-584-00	ELECT 100MF 20% 10V
C504	1-124-225-00	ELECT 100MF 20% 6.3V
C505	1-124-255-00	ELECT 1MF 20% 50V
C506	1-124-255-00	ELECT 1MF 20% 50V
C507	1-124-584-00	ELECT 100MF 20% 10V
C508	1-124-225-00	ELECT 100MF 20% 6.3V
C509	1-124-584-00	ELECT 100MF 20% 10V
C510	1-136-167-00	FILM 0.15MF 5% 50V
C511	1-136-167-00	FILM 0.15MF 5% 50V
C512	1-124-475-00	ELECT 470MF 20% 16V
C601	1-102-116-00	CERAMIC 680PF 10% 50V
C602	1-136-157-00	FILM 0.022MF 5% 50V
C603	1-124-584-00	ELECT 100MF 20% 10V
C604	1-124-225-00	ELECT 100MF 20% 6.3V
C605	1-124-255-00	ELECT 1MF 20% 50V
C606	1-124-255-00	ELECT 1MF 20% 50V
C607	1-124-584-00	ELECT 100MF 20% 10V
C608	1-124-225-00	ELECT 100MF 20% 6.3V
C609	1-124-584-00	ELECT 100MF 20% 10V
C610	1-136-167-00	FILM 0.15MF 5% 50V
C611	1-136-167-00	FILM 0.15MF 5% 50V
C662	1-124-234-00	ELECT 22MF 20% 10V
C701	1-124-222-00	ELECT 22MF 20% 6.3V
C702	1-124-255-00	ELECT 1MF 20% 50V
C703	1-130-480-00	MYLAR 0.0056MF 5% 50V
C704	1-162-306-31	CERAMIC 0.01MF 30% 16V
C705	1-124-249-00	ELECT 0.1MF 20% 50V
C706	1-162-306-31	CERAMIC 0.01MF 30% 16V
C707	1-124-249-00	ELECT 0.1MF 20% 50V
C708	1-162-306-31	CERAMIC 0.01MF 30% 16V
C709	1-162-306-31	CERAMIC 0.01MF 30% 16V
C710	1-124-119-00	ELECT 330MF 20% 16V
C711	1-124-233-00	ELECT 10MF 20% 16V
C712	1-124-224-00	ELECT 47MF 20% 6.3V
C713	1-124-222-00	ELECT 22MF 20% 6.3V
C901	1-124-251-00	ELECT 0.22MF 20% 50V
C902	1-124-251-00	ELECT 0.22MF 20% 50V
C903	1-123-608-00	ELECT 0.22MF 20% 50V
C904	1-124-222-00	ELECT 22MF 20% 6.3V
C905	1-123-566-00	ELECT 2200MF 20% 16V
C906	1-123-333-00	ELECT 100MF 20% 16V
C907	1-123-566-00	ELECT 2200MF 20% 16V
CF1	1-567-415-11	FILTER, CERAMIC
CF2	1-567-415-11	FILTER, CERAMIC
CNJ101	1-557-942-11	CORD (WITH CONNECTOR), ANTTENA
CNJ311	*1-561-976-00	CONNECTOR (F) 8P
CNJ352	*1-562-847-11	SOCKET, CONNECTOR 4P
CNJ901	*1-557-944-11	CORD (WITH CONNECTOR)

ELECTRICAL PARTS

Ref.No.	Part No.	Description
CNP1	*1-564-983-11	PIN CONNECTOR, B-B 8P
CNP201	*1-564-713-11	PIN, CONNECTOR 11P
CNP202	*1-564-343-00	PIN, CONNECTOR 9P
CNP203	*1-560-468-00	PIN, CONNECTOR 5P
CNP204	*1-560-466-00	PIN, CONNECTOR 3P
CNP301	*1-560-882-11	CONNECTOR (M) 4P
CNP302	*1-560-884-00	CONNECTOR (M) 8P
CNP311	*1-560-500-00	PIN, CONNECTOR 10P
CNP701	*1-564-343-00	PIN, CONNECTOR 9P
CNP901	*1-564-937-11	CONNECTOR
CNP902	*1-560-591-00	PIN, CONNECTOR 7P
D1	8-719-901-33	DIODE 1SS133
D101	8-719-100-73	DIODE RD16E-B1
D102	8-719-100-73	DIODE RD16E-B1
D104	8-719-901-33	DIODE 1SS133
D105	8-719-901-33	DIODE 1SS133
D106	8-719-901-33	DIODE 1SS133
D108	8-719-901-33	DIODE 1SS133
D109	8-719-901-33	DIODE 1SS133
D201	8-719-901-33	DIODE 1SS133
D202	8-719-901-33	DIODE 1SS133
D203	8-719-901-33	DIODE 1SS133
D204	8-719-901-33	DIODE 1SS133
D205	8-719-901-33	DIODE 1SS133
D206	8-719-901-33	DIODE 1SS133
D207	8-719-901-33	DIODE 1SS133
D208	8-719-901-33	DIODE 1SS133
D209	8-719-901-33	DIODE 1SS133
D210	8-719-901-33	DIODE 1SS133
D211	8-719-901-33	DIODE 1SS133
D213	8-719-901-33	DIODE 1SS133
D214	8-719-901-33	DIODE 1SS133
D215	8-719-901-33	DIODE 1SS133
D216	8-719-901-33	DIODE 1SS133
D217	8-719-901-33	DIODE 1SS133
D218	8-719-901-33	DIODE 1SS133
D219	8-719-100-56	DIODE RD10E-B1
D220	8-719-100-37	DIODE RD6.2E-B1
D222	8-719-100-57	DIODE RD10E-B2
D223	8-719-100-26	DIODE RD4.7E-B1
D226	8-719-901-33	DIODE 1SS133
D230	8-719-901-33	DIODE 1SS133
D231	8-719-901-33	DIODE 1SS133
D232	8-719-100-26	DIODE RD4.7EB1
D301	8-719-901-33	DIODE 1SS133
D401	8-719-901-33	DIODE 1SS133
D651	8-719-901-33	DIODE 1SS133
D652	8-719-901-33	DIODE 1SS133
D653	8-719-901-33	DIODE 1SS133
D701	8-719-901-33	DIODE 1SS133
D702	8-719-100-47	DIODE RD8.2E-B1
D705	8-719-901-33	DIODE 1SS133
D707	8-719-200-02	DIODE 10E-2
D708	8-719-200-02	DIODE 10E-2
D709	8-719-901-33	DIODE 1SS133

ELECTRICAL PARTS

Ref.No.	Part No.	Description
D710	8-719-901-33	DIODE 1SS133
D711	8-719-901-33	DIODE 1SS133
D712	8-719-901-33	DIODE 1SS133
D713	8-719-901-33	DIODE 1SS133
D714	8-719-901-33	DIODE 1SS133
D715	8-719-156-07	DIODE HZ5.6EB
D716	8-719-901-33	DIODE 1SS133
D720	8-719-901-33	DIODE 1SS133
D801	8-719-920-39	DIODE AY3422K
D802	8-719-920-39	DIODE AY3422K
D803	8-719-920-39	DIODE AY3422K
D804	8-719-920-39	DIODE AY3422K
D805	8-719-920-39	DIODE AY3422K
D806	8-719-920-39	DIODE AY3422K
D807	8-719-920-28	DIODE CL-10PG
D808	8-719-920-26	DIODE CL-10D
D809	8-719-920-26	DIODE CL-10D
D810	8-719-920-28	DIODE CL-10PG
D811	8-719-920-28	DIODE CL-10PG
D812	8-719-920-28	DIODE CL-10PG
D813	8-719-920-28	DIODE CL-10PG
D814	8-719-920-28	DIODE CL-10PG
D815	8-719-920-28	DIODE CL-10PG
D816	8-719-920-26	DIODE CL-10D
D817	8-719-920-26	DIODE CL-10D
D818	8-719-920-26	DIODE CL-10D
D819	8-719-920-26	DIODE CL-10D
D820	8-719-920-26	DIODE CL-10D
D821	8-719-920-26	DIODE CL-10D
D822	8-719-920-26	DIODE CL-10D
D823	8-719-920-26	DIODE CL-10D
D824	8-719-920-28	DIODE CL-10PG
D901	8-719-911-55	DIODE U05G
D902	8-719-911-55	DIODE U05G
D903	8-719-100-73	DIODE RD16E-B1
F901	1-532-421-00	FUSE (5A)
F902	1-532-414-11	FUSE (1A)
FE1	1-463-418-00	FRONT END (FM)
FE101	1-463-605-11	TUNER UNIT, AM
HP701	1-543-248-11	HEAD, PLAYBACK
IC1	8-759-811-40	IC LA1140
IC101	8-759-801-93	IC LA3373
IC201	8-759-103-20	IC UPD1708G-547-00
IC202	8-759-905-47	IC BA338
IC301	8-759-800-36	IC LA3160
IC302	8-759-100-96	IC UPC4558G2
IC303	8-759-913-59	IC LM1036N
IC304	8-759-100-96	IC UPC4558G2
IC501	8-759-204-34	IC TA7270P
IC601	8-759-204-35	IC TA7271P
IC701	8-759-204-05	IC TC9310N-065
IC702	8-759-240-69	IC TC4069UBP
IC703	8-759-645-16	IC M54516P
L1	1-408-559-00	MICRO INDUCTOR 4.7UH
L101	1-408-551-00	MICRO INDUCTOR 1UH
L102	1-408-559-00	MICRO INDUCTOR 4.7UH
L103	1-408-567-00	MICRO INDUCTOR 22UH

ELECTRICAL PARTS

Ref.No.	Part No.	Description
L104	1-408-559-00	MICRO INDUCTOR 4.7UH
L701	1-408-111-00	MICRO INDUCTOR 3.3UH
L901	1-421-369-00	COIL, CHOKE
L902	1-459-123-00	COIL, DUST CORE (PAC)
M701	3-596-501-01	MOTOR ASSY
ND801	1-807-311-11	DISPLAY PANEL, LIQUID CRYSTAL
PL901	1-518-580-11	LAMP, PILOT
PM701	1-454-398-11	SOLENOID, PLUNGER
PM702	1-454-398-11	SOLENOID, PLUNGER
PM703	1-454-398-11	SOLENOID, PLUNGER
Q1	8-729-606-33	TRANSISTOR 2SC2603F
Q2	8-729-883-92	TRANSISTOR 2SC2839
Q101	8-729-606-33	TRANSISTOR 2SC2603F
Q102	8-729-900-61	TRANSISTOR DTA114ES
Q103	8-729-606-33	TRANSISTOR 2SC2603F
Q104	8-729-606-33	TRANSISTOR 2SC2603F
Q105	8-729-178-54	TRANSISTOR 2SC2785
Q106	8-729-606-33	TRANSISTOR 2SC2603-F
Q201	8-729-266-83	TRANSISTOR 2SC2688
Q202	8-729-606-33	TRANSISTOR 2SC2603F
Q203	8-729-606-33	TRANSISTOR 2SC2603F
Q204	8-729-606-33	TRANSISTOR 2SC2603F
Q205	8-729-606-33	TRANSISTOR 2SC2603F
Q206	8-729-606-33	TRANSISTOR 2SC2603F
Q207	8-729-606-33	TRANSISTOR 2SC2603F
Q208	8-729-606-33	TRANSISTOR 2SC2603F
Q209	8-729-606-33	TRANSISTOR 2SC2603F
Q210	8-729-606-33	TRANSISTOR 2SC2603F
Q211	8-729-606-33	TRANSISTOR 2SC2603F
Q212	8-729-900-36	TRANSISTOR DTC124ES
Q213	8-729-900-36	TRANSISTOR DTC124ES
Q214	8-729-606-33	TRANSISTOR 2SC2603F
Q215	8-729-900-36	TRANSISTOR DTC124ES
Q216	8-729-900-36	TRANSISTOR DTC124ES
Q217	8-729-900-36	TRANSISTOR DTC124ES
Q218	8-729-801-83	TRANSISTOR 2SB1013
Q219	8-729-801-83	TRANSISTOR 2SB1013
Q220	8-729-900-36	TRANSISTOR DTC124ES
Q221	8-729-900-36	TRANSISTOR DTC124ES
Q222	8-729-801-83	TRANSISTOR 2SB1013
Q223	8-729-900-61	TRANSISTOR DTA114ES
Q224	8-729-900-36	TRANSISTOR DTC124ES
Q225	8-729-141-42	TRANSISTOR 2SD414-R
Q227	8-729-100-13	TRANSISTOR 2SC2001
Q228	8-729-900-36	TRANSISTOR DTC124ES
Q229	8-729-801-83	TRANSISTOR 2SB1013
Q230	8-729-117-54	TRANSISTOR 2SA1175
Q231	8-729-117-54	TRANSISTOR 2SA1175
Q301	8-729-606-33	TRANSISTOR 2SC2603F
Q302	8-729-606-33	TRANSISTOR 2SC2603F
Q303	8-729-606-33	TRANSISTOR 2SC2603F
Q304	8-729-100-13	TRANSISTOR 2SC2001
Q401	8-729-606-33	TRANSISTOR 2SC2603F
Q402	8-729-606-33	TRANSISTOR 2SC2603F

ELECTRICAL PARTS

Ref.No.	Part No.	Description			
Q404	8-729-100-13	TRANSISTOR 2SC2001			
Q501	8-729-900-36	TRANSISTOR DTC124ES			
Q601	8-729-900-36	TRANSISTOR DTC124ES			
Q652	8-729-900-80	TRANSISTOR DTC114ES			
Q701	8-729-988-12	TRANSISTOR 2SA881			
Q702	8-729-905-52	TRANSISTOR 2SD1055			
Q703	8-729-905-52	TRANSISTOR 2SD1055			
Q705	8-729-900-65	TRANSISTOR DTA144ES			
R1	1-247-879-00	CARBON	100K	5%	1/6W
R2	1-247-831-00	CARBON	1K	5%	1/6W
R3	1-247-819-00	CARBON	330	5%	1/6W
R4	1-247-879-00	CARBON	100K	5%	1/6W
R5	1-247-783-00	CARBON	10	5%	1/6W
R6	1-247-867-00	CARBON	33K	5%	1/6W
R8	1-247-855-00	CARBON	10K	5%	1/6W
R10	1-247-867-00	CARBON	33K	5%	1/6W
R11	1-247-871-00	CARBON	47K	5%	1/6W
R12	1-247-879-00	CARBON	100K	5%	1/6W
R13	1-247-859-00	CARBON	15K	5%	1/6W
R14	1-247-859-00	CARBON	15K	5%	1/6W
R15	1-247-855-00	CARBON	10K	5%	1/6W
R16	1-247-823-00	CARBON	470	5%	1/6W
R17	1-247-831-00	CARBON	1K	5%	1/6W
R18	1-247-819-00	CARBON	330	5%	1/6W
R19	1-247-799-00	CARBON	47	5%	1/6W
R20	1-247-815-00	CARBON	220	5%	1/6W
R21	1-247-823-00	CARBON	470	5%	1/6W
R23	1-247-855-00	CARBON	10K	5%	1/6W
R24	1-247-807-00	CARBON	100	5%	1/6W
R25	1-247-819-00	CARBON	330	5%	1/6W
R101	1-247-889-00	CARBON	270K	5%	1/6W
R102	1-247-827-00	CARBON	680	5%	1/6W
R104	1-247-831-00	CARBON	1K	5%	1/6W
R105	1-247-831-00	CARBON	1K	5%	1/6W
R106	1-247-433-11	CARBON	22K	5%	1/6W
R108	1-247-879-00	CARBON	100K	5%	1/6W
R109	1-247-853-00	CARBON	8.2K	5%	1/6W
R110	1-247-831-00	CARBON	1K	5%	1/6W
R111	1-247-857-00	CARBON	12K	5%	1/6W
R112	1-247-843-00	CARBON	3.3K	5%	1/6W
R113	1-247-843-00	CARBON	3.3K	5%	1/6W
R114	1-247-843-00	CARBON	3.3K	5%	1/6W
R115	1-247-861-00	CARBON	18K	5%	1/6W
R116	1-247-861-00	CARBON	18K	5%	1/6W
R117	1-247-871-00	CARBON	47K	5%	1/6W
R118	1-247-871-00	CARBON	47K	5%	1/6W
R119	1-247-433-11	CARBON	22K	5%	1/6W
R121	1-247-855-00	CARBON	10K	5%	1/6W
R122	1-247-831-00	CARBON	1K	5%	1/6W
R123	1-247-433-11	CARBON	22K	5%	1/6W
R124	1-247-871-00	CARBON	47K	5%	1/6W
R125	1-247-879-00	CARBON	100K	5%	1/6W
R126	1-247-819-00	CARBON	330	5%	1/6W
R127	1-247-855-00	CARBON	10K	5%	1/6W
R128	1-247-855-00	CARBON	10K	5%	1/6W
R129	1-247-879-00	CARBON	100K	5%	1/6W
R130	1-247-845-00	CARBON	3.9K	5%	1/6W

ELECTRICAL PARTS

Ref.No.	Part No.	Description			
R132	1-247-433-11	CARBON	22K	5%	1/6W
R133	1-247-831-00	CARBON	1K	5%	1/6W
R134	1-247-867-00	CARBON	33K	5%	1/6W
R135	1-249-421-11	CARBON	2.2K	5%	1/6W
R146	1-247-433-11	CARBON	22K	5%	1/6W
R201	1-247-879-00	CARBON	100K	5%	1/6W
R202	1-247-807-00	CARBON	100	5%	1/6W
R203	1-247-831-00	CARBON	1K	5%	1/6W
R204	1-247-849-00	CARBON	5.6K	5%	1/6W
R205	1-247-849-00	CARBON	5.6K	5%	1/6W
R206	1-247-831-00	CARBON	1K	5%	1/6W
R207	1-247-843-00	CARBON	3.3K	5%	1/6W
R208	1-247-835-00	CARBON	1.5K	5%	1/6W
R209	1-247-843-00	CARBON	3.3K	5%	1/6W
R210	1-247-847-00	CARBON	4.7K	5%	1/6W
R211	1-247-859-00	CARBON	15K	5%	1/6W
R213	1-247-849-00	CARBON	5.6K	5%	1/6W
R214	1-247-879-00	CARBON	100K	5%	1/6W
R215	1-247-867-00	CARBON	33K	5%	1/6W
R216	1-247-867-00	CARBON	33K	5%	1/6W
R217	1-247-891-00	CARBON	330K	5%	1/6W
R218	1-247-891-00	CARBON	330K	5%	1/6W
R219	1-247-891-00	CARBON	330K	5%	1/6W
R220	1-247-891-00	CARBON	330K	5%	1/6W
R221	1-247-864-00	CARBON	24K	5%	1/6W
R222	1-247-847-00	CARBON	4.7K	5%	1/6W
R223	1-247-879-00	CARBON	100K	5%	1/6W
R224	1-247-887-00	CARBON	220K	5%	1/6W
R225	1-247-843-00	CARBON	3.3K	5%	1/6W
R226	1-247-849-00	CARBON	5.6K	5%	1/6W
R227	1-247-879-00	CARBON	100K	5%	1/6W
R228	1-247-433-11	CARBON	22K	5%	1/6W
R229	1-247-817-00	CARBON	270	5%	1/6W
R230	1-247-807-00	CARBON	100	5%	1/6W
R231	1-247-831-00	CARBON	1K	5%	1/6W
R232	1-247-831-00	CARBON	1K	5%	1/6W
R233	1-247-855-00	CARBON	10K	5%	1/6W
R234	1-247-831-00	CARBON	1K	5%	1/6W
R235	1-247-855-00	CARBON	10K	5%	1/6W
R236	1-247-851-00	CARBON	6.8K	5%	1/6W
R237	1-247-851-00	CARBON	6.8K	5%	1/6W
R238	1-247-851-00	CARBON	6.8K	5%	1/6W
R239	1-247-851-00	CARBON	6.8K	5%	1/6W
R240	1-247-851-00	CARBON	6.8K	5%	1/6W
R241	1-247-851-00	CARBON	6.8K	5%	1/6W
R242	1-247-831-00	CARBON	1K	5%	1/6W
R243	1-247-851-00	CARBON	6.8K	5%	1/6W
R244	1-247-851-00	CARBON	6.8K	5%	1/6W
R245	1-247-849-00	CARBON	5.6K	5%	1/6W

ELECTRICAL PARTS

Ref.No.	Part No.	Description			
R247	1-247-879-00	CARBON	100K	5%	1/6W
R250	1-247-871-00	CARBON	47K	5%	1/6W
R251	1-247-855-00	CARBON	10K	5%	1/6W
R253	1-247-855-00	CARBON	10K	5%	1/6W
R254	1-247-871-00	CARBON	47K	5%	1/6W
R256	1-247-903-00	CARBON	1M	5%	1/6W
R260	1-249-437-11	CARBON	47K	5%	1/6W
R261	1-247-807-00	CARBON	100	5%	1/6W
R270	1-247-879-00	CARBON	100K	5%	1/6W
R271	1-247-879-00	CARBON	100K	5%	1/6W
R272	1-247-879-00	CARBON	100K	5%	1/6W
R301	1-247-801-00	CARBON	56	5%	1/6W
R302	1-247-845-00	CARBON	3.9K	5%	1/6W
R303	1-247-879-00	CARBON	100K	5%	1/6W
R304	1-247-834-00	CARBON	1.3K	5%	1/6W
R305	1-247-835-00	CARBON	1.5K	5%	1/6W
R306	1-247-897-00	CARBON	560K	5%	1/6W
R307	1-247-851-00	CARBON	6.8K	5%	1/6W
R308	1-247-879-00	CARBON	100K	5%	1/6W
R309	1-247-829-00	CARBON	820	5%	1/6W
R310	1-247-855-00	CARBON	10K	5%	1/6W
R311	1-247-857-00	CARBON	12K	5%	1/6W
R312	1-247-835-00	CARBON	1.5K	5%	1/6W
R315	1-247-903-00	CARBON	1M	5%	1/6W
R316	1-247-879-00	CARBON	100K	5%	1/6W
R320	1-247-855-00	CARBON	10K	5%	1/6W
R321	1-247-855-00	CARBON	10K	5%	1/6W
R322	1-249-421-11	CARBON	2.2K	5%	1/6W
R323	1-247-879-00	CARBON	100K	5%	1/6W
R325	1-247-847-00	CARBON	4.7K	5%	1/6W
R326	1-247-855-00	CARBON	10K	5%	1/6W
R327	1-249-421-11	CARBON	2.2K	5%	1/6W
R328	1-247-849-00	CARBON	5.6K	5%	1/6W
R401	1-247-801-00	CARBON	56	5%	1/6W
R402	1-247-845-00	CARBON	3.9K	5%	1/6W
R403	1-247-879-00	CARBON	100K	5%	1/6W
R404	1-247-834-00	CARBON	1.3K	5%	1/6W
R405	1-247-835-00	CARBON	1.5K	5%	1/6W
R406	1-247-897-00	CARBON	560K	5%	1/6W
R407	1-247-851-00	CARBON	6.8K	5%	1/6W
R408	1-247-879-00	CARBON	100K	5%	1/6W
R409	1-247-829-00	CARBON	820	5%	1/6W
R410	1-247-855-00	CARBON	10K	5%	1/6W
R411	1-247-855-00	CARBON	10K	5%	1/6W
R412	1-247-835-00	CARBON	1.5K	5%	1/6W
R415	1-247-903-00	CARBON	1M	5%	1/6W
R416	1-247-879-00	CARBON	100K	5%	1/6W
R417	1-247-871-00	CARBON	47K	5%	1/6W
R422	1-249-421-11	CARBON	2.2K	5%	1/6W
R423	1-247-879-00	CARBON	100K	5%	1/6W
R424	1-247-849-00	CARBON	5.6K	5%	1/6W
R425	1-247-847-00	CARBON	4.7K	5%	1/6W

ELECTRICAL PARTS

Ref.No.	Part No.	Description			
R426	1-247-855-00	CARBON	10K	5%	1/6W
R427	1-249-421-11	CARBON	2.2K	5%	1/6W
R428	1-247-849-00	CARBON	5.6K	5%	1/6W
R501	1-247-852-00	CARBON	7.5K	5%	1/6W
R502	1-247-831-00	CARBON	1K	5%	1/6W
R503	1-247-815-00	CARBON	220	5%	1/6W
R504	1-247-815-00	CARBON	220	5%	1/6W
R505	1-247-873-00	CARBON	56K	5%	1/6W
R566	1-246-433-00	CARBON	22	5%	1/6W
R601	1-247-852-00	CARBON	7.5K	5%	1/6W
R602	1-247-831-00	CARBON	1K	5%	1/6W
R603	1-247-815-00	CARBON	220	5%	1/6W
R604	1-247-815-00	CARBON	220	5%	1/6W
R605	1-247-873-00	CARBON	56K	5%	1/6W
R656	1-247-871-00	CARBON	47K	5%	1/6W
R657	1-247-855-00	CARBON	10K	5%	1/6W
R658	1-247-879-00	CARBON	100K	5%	1/6W
R659	1-247-863-00	CARBON	22K	5%	1/6W
R701	1-247-807-00	CARBON	100	5%	1/6W
R702	1-247-807-00	CARBON	100	5%	1/6W
R703	1-247-807-00	CARBON	100	5%	1/6W
R704	1-247-831-00	CARBON	1K	5%	1/6W
R705	1-247-855-00	CARBON	10K	5%	1/6W
R706	1-247-855-00	CARBON	10K	5%	1/6W
R707	1-247-849-00	CARBON	5.6K	5%	1/6W
R708	1-247-831-00	CARBON	1K	5%	1/6W
R709	1-247-831-00	CARBON	1K	5%	1/6W
R710	1-247-831-00	CARBON	1K	5%	1/6W
R711	1-247-871-00	CARBON	47K	5%	1/6W
R712	1-247-871-00	CARBON	47K	5%	1/6W
R713	1-247-865-00	CARBON	27K	5%	1/6W
R714	1-249-421-11	CARBON	2.2K	5%	1/6W
R715	1-247-865-00	CARBON	27K	5%	1/6W
R716	1-247-871-00	CARBON	47K	5%	1/6W
R717	1-247-871-00	CARBON	47K	5%	1/6W
R718	1-247-819-00	CARBON	330	5%	1/6W
R719	1-247-865-00	CARBON	27K	5%	1/6W
R720	1-247-891-00	CARBON	330K	5%	1/6W
R721	1-247-903-00	CARBON	1M	5%	1/6W
R722	1-247-879-00	CARBON	100K	5%	1/6W
R723	1-247-891-00	CARBON	330K	5%	1/6W
R724	1-249-421-11	CARBON	2.2K	5%	1/6W
R725	1-247-864-00	CARBON	24K	5%	1/6W
R726	1-247-864-00	CARBON	24K	5%	1/6W
R727	1-247-815-00	CARBON	220	5%	1/6W
R728	1-247-871-00	CARBON	47K	5%	1/6W
R729	1-247-855-00	CARBON	10K	5%	1/6W
R730	1-247-855-00	CARBON	10K	5%	1/6W
R731	1-247-855-00	CARBON	10K	5%	1/6W
R732	1-247-879-00	CARBON	100K	5%	1/6W
R735	1-247-855-00	CARBON	10K	5%	1/6W
R801	1-216-178-00	METAL CHIP	150	5%	1/8W
R802	1-216-174-00	METAL CHIP	100	5%	1/8W
R803	1-216-174-00	METAL CHIP	100	5%	1/8W
R804	1-216-178-00	METAL CHIP	150	5%	1/8W
R805	1-216-178-00	METAL CHIP	150	5%	1/8W
R806	1-216-178-00	METAL CHIP	150	5%	1/8W
R807	1-216-178-00	METAL CHIP	150	5%	1/8W
R901	1-247-871-00	CARBON	47K	5%	1/6W
R902	1-247-871-00	CARBON	47K	5%	1/6W

ELECTRICAL PARTS

Ref.No.	Part No.	Description			
R903	1-247-871-00	CARBON	47K	5%	1/6W
R904	1-247-847-00	CARBON	4.7K	5%	1/6W
RV101	1-228-891-00	RES, ADJ, METAL GLAZE 10K			
RV102	1-226-711-00	RES, ADJ, SOLID 22K			
RV103	1-226-715-00	RES, ADJ, SOLID 470K			
RV301	1-230-497-11	RES, ADJ, CARBON 22K			
RV401	1-230-497-11	RES, ADJ, CARBON 22K			
RV901	1-230-805-11	RES, VAR, CARBON 50K (BASS)			
RV902	1-230-805-11	RES, VAR, CARBON 50K (TREBLE)			
RV903	1-230-807-11	RES, VAR, CARBON 80X2/50K/10K (FADER/PULL BAL/VOL)			
S701	1-570-248-11	SWITCH, SLIDE			
S702	1-570-249-11	SWITCH, LEAF			
S703	1-570-250-11	SWITCH, LEAF			
S801	1-554-813-21	SWITCH, KEY BOARD (PLAY/DIR)			
S802	1-554-813-21	SWITCH, KEY BOARD (FF)			
S803	1-554-813-21	SWITCH, KEY BOARD (REW)			
S804	1-554-813-21	SWITCH, KEY BOARD (EJECT)			
S805	1-554-980-11	SWITCH, KEY BOARD (1)			
S806	1-554-980-11	SWITCH, KEY BOARD (2)			
S807	1-554-980-11	SWITCH, KEY BOARD (3)			
S808	1-554-980-11	SWITCH, KEY BOARD (4)			
S809	1-554-980-11	SWITCH, KEY BOARD (5)			
S810	1-554-980-11	SWITCH, KEY BOARD (6)			
S811	1-554-813-21	SWITCH, KEY BOARD (MONO)			
S812	1-554-813-21	SWITCH, KEY BOARD (METAL/LOCAL)			
S813	1-554-813-21	SWITCH, KEY BOARD (MEMORY/TIME SET)			
S814	1-554-813-21	SWITCH, KEY BOARD (MANUAL +/M)			
S815	1-554-813-21	SWITCH, KEY BOARD (MANUAL -/M)			
S816	1-554-813-21	SWITCH, KEY BOARD (DISPLAY)			
S817	1-554-980-11	SWITCH, KEY BOARD (LOUDNESS)			
S818	1-554-980-11	SWITCH, KEY BOARD (BAND)			
S819	1-554-980-11	SWITCH, KEY BOARD (SEEK)			
S901	1-230-807-11	RES, VAR, CARBON 80X2/50K/10K (PUSH RADIO)...included in RV903			
SPC501*	1-557-945-11	CORD, SPEAKER (GRY/WHT)			
SPC551*	1-557-945-31	CORD, SPEAKER (BLU/WHT)			
SPC601*	1-557-945-21	CORD, SPEAKER (GRY/RED)			
SPC651*	1-557-945-41	CORD, SPEAKER (BLU/RED)			
T1	1-404-463-00	TRANSFORMER, DISCRIMINATOR			
X201	1-567-116-00	VIBRATOR, CRYSTAL			

ACCESSORY & PACKING MATERIAL

Part No.	Description
1-532-414-11	FUSE (1A)
1-532-421-00	FUSE (5A)
3-302-126-00	SCREW, TAPPING (DIA. 5X20)
3-310-655-01	SUPPORT (ND), FITTING
3-320-642-00	BAG (D), PROTECTION
3-323-206-01	STOPPER (LARGE)
3-323-208-01	BUSHING, RUBBER
3-323-209-01	BOLT (4-5), STUD
3-323-210-01	ADJUSTOR, STUD BOLT
3-323-211-01	HOLDER
3-323-214-01	BRACKET (LEFT), DRAWER
3-323-215-01	BRACKET (RIGHT), DRAWER
3-323-217-01	HOLDER, BUSHING
3-323-219-01	FRAME, FITTING
*3-323-284-01	MANUAL, INSTRUCTION, BRACKET
3-323-286-01	FRAME, ORNAMENTAL
3-323-287-01	PROTECTOR
3-324-353-01	CARTON, ACCESSORY
3-324-387-01	CUSHION (H)
3-325-768-01	BAG (A), PROTECTION
3-701-613-00	BAG, POLYETHYLENE
3-701-619-00	BAG, POLYETHYLENE, STANDARD
3-701-626-00	BAG, POLYETHYLENE
3-701-628-00	BAG, POLYETHYLENE
3-765-080-21	MANUAL, INSTRUCTION
3-764-365-21	INSTRUCTION
3-325-739-00	SCREW, STEP
X-3320-515-1	BRACKET (RIGHT) ASSY
X-3320-516-1	BRACKET (LEFT) ASSY
X-3320-524-1	SCREW ASSY (A)

English
86C05351
Printed in Japan
© 1986

9-952-135-11

Sony Corporation